DEPARTMENT OF THE AIR FORCE
Headquarters US Air Force
Washington DC 20310-2500

NGR (AF) 20-2

1 November 1992

Organization and Mission--General

AIR DIRECTORATE FIELD ADVISORY COUNCIL (ADFAC)

This regulation provides the Air Directorate Field Advisory Council with a new regulation that will enable them to function in compliance with National Guard Bureau directives regarding Total Quality Management guidelines.

Summary of Changes: This revision modifies the ANG Weapons Systems Council (WSC) structure to better represent the different missions of ANG units. In addition, the chairman of the ADFAC will no longer represent a weapons system.

1. Vision. "A process for information flow between the Air Directorate and the field that improves the quality and readiness of the Air National Guard."

2. Purpose. Advise and assist the Director, Air National Guard (ANG) in the execution of the ANG mission.

3. Goals:

a. Serve as a Board of Directors for the Director of the Air National Guard

b. Provide the Director, ANG an advisory group that makes field recommendations on significant policy, directive and regulatory changes at issue prior to implementation.

c. Provide the Director, ANG with a conduit for disseminating significant policy decisions.

d. Maintain a process that identifies, validates and prioritizes field issues for timely resolution.

e. Promote and support a field framework for a total quality system, ANG-wide.

4. Roles:

a. Represent all formal councils at the Directors' level.

b. Assist the Director in policy development.

c. Represent the Director to the field.

d. Provide field perspective on issues.

e. Be a consensus-forming body.

5. Membership:

a. The ADFAC is composed of a council chairperson and the chairpersons of the ANG weapons system councils as follows:

(1) Close Air Support (A-10/OA-10)
(2) Fighter/General Purpose (F-16/9AF)
(3) Fighter/General Purpose (F-16/12AF)
(4) Air Defense/Air Superiority (F-15, F-16)
(5) Reconnaissance/Weasel (RF-4, F-4G)
(6) Aerial Refueling (KC-135)
(7) Airlift (C-130) 21st AF
(8) Airlift (C-130) 22nd AF
(9) Strategic Airlift, Special Missions, Search and Rescue, Special Operations and AeroMed, (C-141, C-5, MH-60, EC-130, HC-130, LC-130)
(10) Combat Crew Training (F-16, RF-4, C-130)
(11) Air Control Units
(12) Combat Communications/Engineering Installation
(13) Combat Readiness Training Centers/ Base Operation Support

b. Each weapons system council is composed of wing/group commanders according to their units' weapons systems or missions as delineated in paragraph 5a. The councils are forums for the commanders to discuss major issues, study problems, and present recommendations through the ADFAC to the Director, ANG. Neither the weapons systems councils nor the ADFAC negate, diminish, or replace the authority and responsibility of the adjutants general or circumvent chain-of-command requests for higher headquarters (State, NGB) action/assistance.

c. The chairperson of each weapons system council is elected and an alternate appointed from the council's membership at the appropriate ANG senior commanders' conference. If the chairperson is unable to complete his/her term of service, the alternate will serve the remainder of the term or until a new chairperson is elected.

d. The Deputy Director, ANG; Commander, Air National Guard Readiness Center (ANGRC); and the Chief of Staff, Air Directorate, National Guard Bureau, and other such persons as the Director, ANG, and the ADFAC chairperson designate, may participate as ex-officio members.

e. The chairperson of each functional area council will be appointed ex-officio members and an alternate appointed from their respective council membership for attendance at all ADFAC off-site meetings. If the chairperson is unable to complete his/her term of service, the alternate will serve the remainder of the term or until a new chairperson is elected. Liaisons for functional area council ex-officio members of the ADFAC will be appointed by the ADFAC chairperson and approved by the full council and reviewed on an annual basis.

f. The ADFAC chairperson may, upon request or recommendation of the members, invite the participation of the ANG commanders and staff personnel as necessary to conduct ADFAC business.

6. Appointments and Terms of Service:

Supersedes ANGR 20-2, 1 Apr 88
No. of Printed Pages: 6
OPR: ANGRC/CC (Lt Col Moore)
Approved by: Lt Gen Conaway
Edited by: Ms. N. Salch
Distribution: F, X (See Signature Page)

a. ADFAC members are appointed to a three year term and may succeed themselves by election as chairperson of their respective weapons system council.

b. The ADFAC chairperson is appointed by the Director, ANG. The chairperson will be a general officer and serve at the pleasure of the Director. The chairperson, in turn, appoints a vice chairperson to serve concurrently with his/her term of service and to discharge the duties of the chairperson in his/her absence.

7. Submission Procedures Cycle:

a. WSC/FAC - Validates proposed ADFAC agenda issues and submits them to the ADFAC coordinator.

b. ADFAC coordinator - Receives and logs ADFAC issues and forwards them to the ADFAC chairperson.

c. ADFAC chairperson - Receives and consolidates ADFAC issues prior to the off-site meeting and the chairperson's staff will distribute them to the ADFAC members two weeks prior to the off-site meeting.

d. ADFAC members - Receive, review and prioritize ADFAC issues internally before off-site meeting. Items that can not be resolved at Weapon Systems Councils (WSC) or Functional Area Councils (FAC) may be sent to the ADFAC.

e. After the off-site meeting the chairperson of the ADFAC and the coordinator will brief the Director, Air National Guard on the minutes of the ADFAC off-site meeting and the executive summary of issues. The status of the issues will be briefed at the next on-site ADFAC meeting.

8. Meetings:

a. The ADFAC convenes on a quarterly basis (Mar/Jun/Sep/Dec) or as called by the chairperson or the Director, ANG. The March and September "On-Site" meetings will be held at the ANGRC, Andrews AFB, MD. The June and December "Off Site" meetings will be held at locations to be determined by the ADFAC membership at each March and September meeting. A quorum of seven primary members or their alternates are required to conduct ADFAC business.

b. On-site meeting support will be provided by the Commander ANGRC to include the following:

(1) Administrative support/supplies

(2) TQM facilitators and recorders (as required)

(3) Graphics support/supplies

(4) Audiovisual support/supplies

(5) Transportation/billeting support

(6) Meeting facility

c. Off-site meeting support will be provided by the host ADFAC member to include the items in 8b.

d. Primary purpose of the off-site meeting is to prioritize and validate issues submitted to the ADFAC for inclusion in the agenda for the on-site meetings.

e. The weapons system councils meet, at least semi-annually, or at the call of their respective chairperson.

f. The ADFAC coordinator will provide an ADFAC critique form (attachment 3) after each on-site meeting to the following:

(1) The Director, Air National Guard

(2) The ADFAC chairperson

(3) Commander, Air National Guard Readiness Center

(4) All ADFAC members

g. The ADFAC coordinator will provide an ADFAC critique form (attachment 3) after each formal meeting of the identified councils and will be included for self evaluation of the ADFAC at each scheduled meeting. These critique forms will be submitted to:

(1) Each weapon system council

(2) Each functional area council

(3) Any Air National Guard member desiring input

h. Proposed ADFAC agenda topics/issues are submitted to the ADFAC using the process depicted in the flow chart at attachment 1. A format for submission of issues is at attachment 2.

i. ADFAC meeting minutes will be published after coordination with the appropriate NGB staff elements and upon approval of the ADFAC chairperson and the Director, ANG.

9. Travel:

a. All travel by ADFAC members required to conduct ADFAC business is National Guard Bureau-directed.

b. All travel by weapons systems council members, including the chairpersons and functional area representatives, required to conduct council business will be NGB-directed.

c. Technicians must travel in technician status.

10. Coordinator:

a. The Commander, ANGRC is the Air Directorate point-of-contact for the coordination of all ADFAC matters.

b. The Commander, ANGRC will appoint the coordinator for the ADFAC.

c. The duties of the coordinator will include the following:

(1) Coordinates instructions/details of all ADFAC meetings.

(2) Coordinates and notifies ADFAC members of all meetings.

(3) Coordinates on- and off-site meetings with the ADFAC chairperson and host.

(4) Coordinates the NATO (Nature, Agenda, Time, Outcome) model with the ADFAC chairperson and host and distributes it to the members.

(5) Coordinates and schedules facilitators and recorders as required.

(6) Distribution of ADFAC minutes per attached list.

(7) Receives, logs, and forwards to chairperson all proposed ADFAC agenda items.

(8) Performs other duties as required by the ADFAC chairperson and members.

(9) Coordinates and schedules NGB/ANGRC staff for presentations and/or position papers and ADFAC agenda items.

11. Attachment 2 "ADFAC Issue" format may be locally reproduced and submitted to the addressee via the appropriate weapons system council or command structure.

12. Attachment 3 "ADFAC Critique" format may be locally reproduced and submitted to the addressee via the appropriate weapons system council or command structure.

BY ORDER OF THE SECRETARY OF THE AIR FORCE

JOHN B. CONAWAY
Lieutenant General, USAF
Chief, National Guard Bureau

OFFICIAL

E. DARDEN BAINES
Director
Administrative Services

3 Attachments
1. ADFAC Flow Chart
2. ADFAC Issue Format
3. ADFAC Critique Format

DISTRIBUTION X:

DISTRIBUTION OF MINUTES WILL BE AS FOLLOWS, 1 COPY EACH:
NGB/CF
NGB/CMS
NGB/DP
NGB/CE
NGB/LG
NGB/FM
NGB/XO
NGB/SG
NGB/RD
ANGRC/CC
ANGRC/DP
ANGRC/CE
ANGRC/LG
ANGRC/FM
ANGRC/DO
ANGRC/DON
ANGRC/SG
ANGRC/MO
ANGRC/TE
ANGRC/SC
ANGRC/SE
ANGRC/SM
ANGRC/HC
ADFAC MEMBERS
CHAIRMAN, FUNCTIONAL AREA COUNCILS
OTHERS DETERMINED APPROPRIATE BY THE DIRECTOR

ADFAC PROCESS

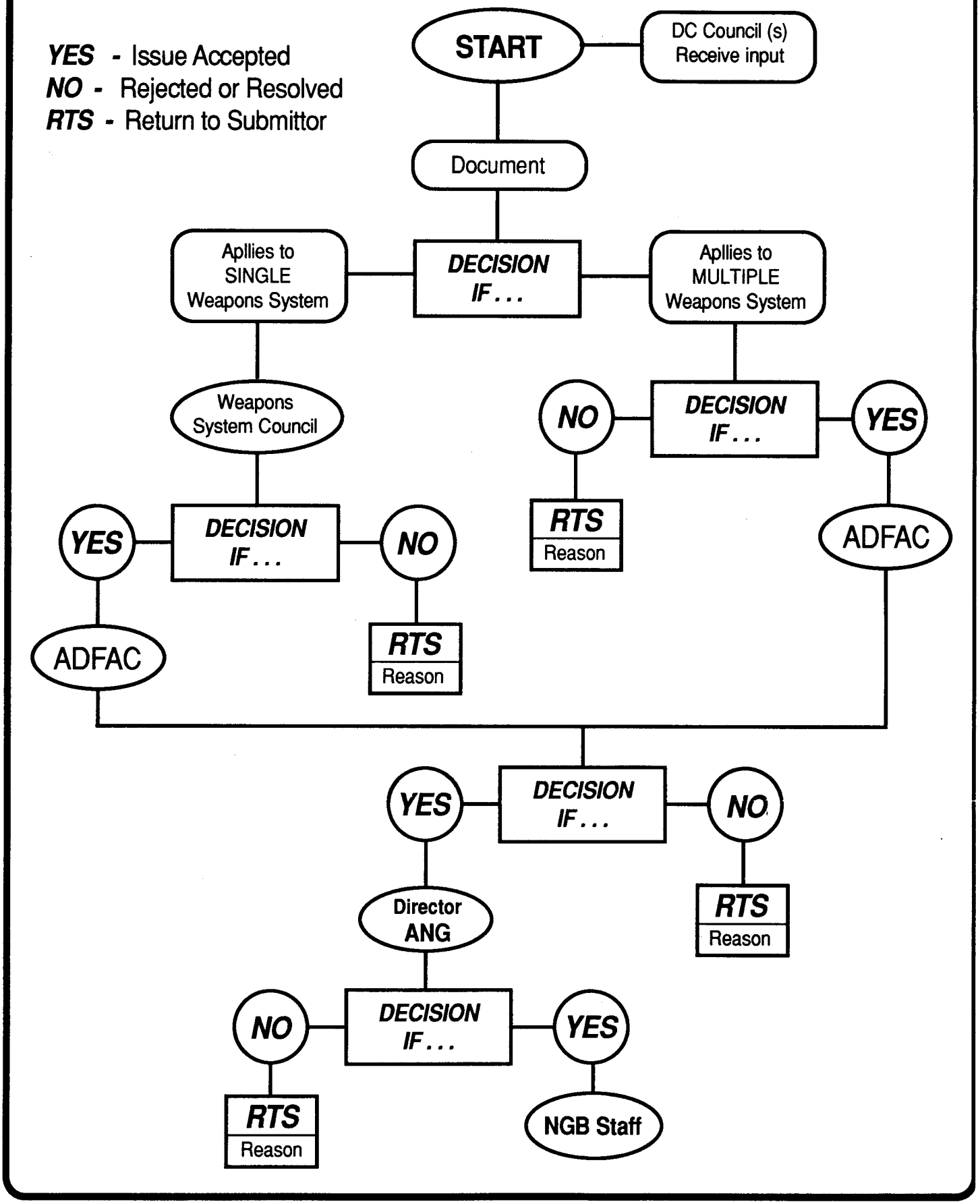

ADFAC

Excellence through Leadership

ADFAC LOG # _____

DATE REC'D _____

Air Directorate Field Advisory Council

ANGRC/CC
ADFAC COORDINATOR
MAIL STOP 18
ANDREWS AFB, MD 20331 - 6008

SUBMITTER INFORMATION:

NAME : _____

RANK : _____

UNIT / ORG : _____

DSN: _____ **COMM :** _____

Title of Proposed ADFAC Agenda Item :

Background :

Discussion :

Recommendation :

Status :

Proposed OPR :

FOR ADFAC USE ONLY

APPROPRIATE: NOT APPROPRIATE:

RECOMMENDED DISPOSITION

ADFAC

Excellence through Leadership

ADFAC LOG #_____

DATE REC'D _____

Air Directorate Field Advisory Council

ANGRC/CC
ADFAC COORDINATOR
MAIL STOP 18
ANDREWS AFB, MD 20331 - 6008

SUBMITTER INFORMATION:

NAME : _____

RANK : _____

UNIT / ORG : _____

DSN: _____ **COMM :** _____

Evaluation of ADFAC Performance

Items of Evaluation :

	Worst 1	2	3	4	Best 5
1. How well do we represent all formal councils at the Director's level?	☐	☐	☐	☐	☐
2. How well do we assist the Director in policy development?	☐	☐	☐	☐	☐
3. How well do we assist the Director to the field?	☐	☐	☐	☐	☐
4. How well do we provide field perspective on issues?	☐	☐	☐	☐	☐
5. How well do we represent a consensus forming body?	☐	☐	☐	☐	☐
6. How efficient is timeliness of response to issues?	☐	☐	☐	☐	☐

Other Comments As Desired :