BY ORDER OF THE CHIEF,
NATIONAL GUARD BUREAU

ANGPAM 21-103
29 JANUARY 1999

Maintenance

MAINTENANCE DATA SYSTEMS ANALYSIS GUIDE

This publication interfaces with ANGI 21-101, *Maintenance Management of Aircraft*, and provides the ANG analysts with a reference tool with which to train themselves and others in the performance of their assigned duties and responsibilities. It is not all-inclusive but covers common areas in the analysis arena. It does not duplicate technical instructions or written regulations. It does provide the user more in-depth knowledge of the job and details the impact that the user can have on the organization. The guidance provided is for the user's information and is non-directive in nature.

Table of Contents

		Page
Chapter 1	The Maintenance Data Systems Analysis Career Field	2
Chapter 2	Who Are Maintenance Data Systems Analysts	3
Chapter 3	ANG Assignment Process	3
Chapter 4	The Dedicated Maintenance Analyst	4
Chapter 5	Keys to Effectiveness	4
Chapter 6	Data Integrity Methodology	6
Chapter 7	Training	8
Chapter 8	Self-Assessment	10
Chapter 9	Maintenance Capability Forecasting	11
Chapter 10	Analytical Methods	13
Chapter 11	Presentation Techniques	19
Chapter 12	Trend Analysis	20
Chapter 13	Control Charts	21
Chapter 14	Determining Sample Size	25
Chapter 15	Keys to Reliability Assessment	26
Chapter 16	Maintenance Information Systems	28
Chapter 17	Data Base Management	32
Chapter 18	The Deployed Analyst	35
Tables		
17.1.	Checklist for Unit Performing DBF Functions	32
A5.1.	Required MTBCF	75
A7.1.	Weapons Systems Definitions and Metrics	82
Attachments		
Attachment 1	References, Professional Library and File System	37
Attachment 2	Glossary of Statistical Terms	38
Attachment 3	Data Dictionary	55
Attachment 4	Abbreviations and Acronyms	61
Attachment 5	Definitions	69
Attachment 6	Algorithms For Logistics - Quality Performance Measures	77
Attachment 7	Definitions and Metrics	82
Attachment 8	Helpful Hints for Data Investigation	95
Attachment 9	USAF Formal Schools Extract: Analysis Courses	99
Attachment 10	Logistics Analysis Data Request	100

OPR: ANG/LGMM (MSgt Ed Girard)

Certified by NGB/CF (Col T. Scherling)
Pages: 101/Distribution: F

Chapter 1

THE MAINTENANCE DATA SYSTEMS ANALYSIS CAREER FIELD

1.1. Specialty Description. Senior leaders need to understand maintenance data analysis and how it fits into the overall organization. This section explains senior leaders' purpose and how they are trained.

1.1.1. AFMAN 36-2108, *Airman Classification Guide*, Attachment 18, "Maintenance Management Systems Career Field (2R)," page 306, provides a specialty summary, an overview of duties and responsibilities, and specialty qualification requirements.

1.1.2. The Career Field Education and Training Plan (CFETP), Section B, also provides career progression and information relating to duties and responsibilities. The following is an extract from this document to provide a short overview of the duties. For a complete listing of these duties refer to CFETP 2R0X1, dated August 1994.

1.2. Maintenance Data Systems Analysis Apprentice and Journeyman. Monitors, collects, assembles and audits data for reports and briefings. Initiates special studies, investigations, and performs statistical analysis. Provides report findings to managers with recommendations for solutions and identifies significant factors affecting mission capabilities and system reliability. Uses statistical techniques, interprets findings from data, identifies trends and significant deviations, and recommends corrective actions. Analyzes deficiencies in areas such as equipment performance, material consumption, scheduling, management and resources; their impact on the unit mission; and results of corrective actions. Maintains and operates Management Information Systems (MIS), such as the Core Automated Maintenance System (CAMS). Identifies problems related to MIS operation and maintenance. Identifies, corrects and repairs MIS database problems. Coordinates new and updated software requirements. Spot checks maintenance data for integrity and accuracy. May act as Data Integrity Team Leader.

1.3. Maintenance Data Systems Analysis Craftsman. Supervises Maintenance Data Systems Analysis, MIS, and associated support equipment. Establishes work methods, performance standards, and allocates work to subordinates. Ensures that valid statistical procedures are utilized. Reviews work progress and completed actions for adequacy and compliance with standards. Develops policies and procedures for MIS application within logistics and operations activities. Acts as Data Integrity Team Leader. Conducts OJT on 3-level trainees and evaluates progress.

1.4 Maintenance Data Systems Analysis Superintendent. Plans, organizes, directs, and manages Maintenance Data Systems Analysis activities. Inspects and evaluates analysis and MIS user activities. Resolves technical problems related to maintenance analysis and the operation and maintenance of MIS subsystems. Develops factors to measure and project capabilities of maintenance manpower, equipment, and facilities. Manages the Data Integrity Program.

1.5. Specialty Qualifications. Knowledge of operations and logistics organizations is mandatory. Also important is knowledge of principles of management procedures applying to aircraft, missiles, communication-electronics, space systems or related equipment; applied statistical, analytical, and presentation techniques and concepts; data systems design procedures; MIS and small computer operation and use; and concepts and application of directives. Career Field Training is provided via AETC Formal Schools, Career Development Courses (CDC), On-the-Job Training, Computer Directed Training Systems (CDTS) Courses, Exportable Courses, Mobile Training Teams, REMIS Schools, MAJCOM Schools, and CAMS/GO81 computer based training courses listed in AFCAT 36-2223.

Chapter 2

WHO ARE MAINTENANCE DATA SYSTEMS ANALYSTS

2.1 Vision: Provide expert proactive analytical support to all our Customers. This vision statement was developed by the ANG Logistics Management Office for the Maintenance Data Systems Analysis career field. This vision statement will serve as a model for all Air National Guard Maintenance Data Systems Analysts. This vision statement provides focus for all decisions relating to the Maintenance Data Systems Analysis career field.

2.2. Maintenance Data Systems Analysts. These professionals are highly trained in problem solving, application of statistical techniques, oral, and written communication, presentation of data and findings, computer operation and software applications, and management of Management Information Systems. They gather data, compile information, research, investigate, and solve problems. They troubleshoot, evaluating the pulse of the organization.

2.3. Maintenance Data Systems Analysis Today.
2.3.1. Maintenance Data Systems Analysis (AFSC: 2R0X1) is a relatively small career field numbering about 800 military personnel. The average number of years of experience for analysts is approximately 2.7 and for the DBM function 1.8 years. We have received a large influx of 3-levels to offset personnel losses. A large number of our middle managers are cross trainees.

2.3.2. The 2R0 technical school is located at Sheppard AFB, TX. The basic analysis course J3ABR2R031-004 consists of 56 academic days; while the 5-level course J3AZR2R051-003 consists of 30 academic days; and the 7-level course J3AAR2R071-005 consists of 20 academic days. Course revision took place in the spring of 1994. ANG Maintenance Data Systems Analysis elements at unit level vary from 1 to 5, depending on the unit size and makeup.

Chapter 3

ANG ASSIGNMENT PROCESS

3.1. Purpose: To advise all personnel of the assignment process used by the Air National Guard to ensure fair and equitable assignment selection for all.

3.2. Unit Level: Vacancies are advertised locally. Assignments are unit directed. The selectee is then chosen from a list of the most eligible candidates.

3.3. Command Level: At the Air National Readiness Center assignments are advertised and the most qualified applicant is selected. In this manner all applicants have an equal chance for assignment.

3.4. Vacancy versus Assignment: If there is a vacancy at "base X," does not certify that this vacancy will be filled. Requirements are determined based on both need and management's decision to fill the position.

3.5. Force Dynamics: There are many circumstances that dictate when positions are to be filled. Some of these circumstances are: base enhancements, re-training programs, management re-engineering, change of weapon systems, and retirement losses, which can all impact the basis for assignment.

3.6. Future Vacancy: Every effort should be made to overlap the position in order to provide the training and continuity in the position. This procedure will result in no gaps for ongoing programs/studies and provide a smooth transition.

Chapter 4

THE DEDICATED MAINTENANCE ANALYST

4.1.Purpose. The need for a dedicated maintenance analyst is to provide the unit with expert proactive analytical support. A Maintenance Data Systems Analyst is assigned to each Logistics Group. The analyst is knowledgeable of management practices and is qualified to present meaningful findings and results to managers at all levels. Accomplishing LG tasks is the analyst's primary responsibility. The Maintenance Data System Analyst is responsible for the overall effectiveness of the analysis program.

4.2. Responsibilities. The dedicated maintenance analyst is usually responsible for attending stand-up and scheduling meetings, preparing key performance indicators, computing capabilities, assisting with documentation policies and procedures, briefing quality performance measurements, performing special studies, providing up-channel reports as required, and performing related tasks. The maintenance analyst also performs comparison analysis of maintenance indicators between like units.

4.3. Examples of Tasks:
4.3.1. Spot-check the sortie maintenance debriefing forms and track in-flight discrepancies on aircraft.
4.3.2. Brief on problem aircrafts and systems.
4.3.3. Brief on weekly/monthly data as required by LG/CC.
4.3.4. Provide analyses as requested or when identified through review of various performance data.
4.3.5. Review cannibalization documentation for accuracy.
4.3.6. Advise the LG managers of any recurring problems.
4.3.7. Monitor the Aircraft Utilization (UTE) rate.
4.3.8. Analyze programmed and actual attrition factors.
4.3.9. Monitor performance indicators and provide narrative explanations when key indicators differ from applicable standards, goals, or averages.
4.3.10. Identify trends and provide recommendations to resolve problems and identify areas/problems for the headquarters staff attention.
4.3.11. Provide LG input for the RCS: ANG/LGM 7401, *Monthly Maintenance Summary*, and other periodic or special reports.
4.3.12. Recommend PAT team investigation of problems beyond the analyst's capabilities and serve on the team as a member or special consultant as necessary.

Chapter 5

KEYS TO EFFECTIVENESS

5.1. Credibility.
5.1.1. We wanted to start with this subject because without creditility your duties and responsibilities will be of little use to your organization. The old saying, "A man's word is his bond," can be directly applied to analysts. Because management decisions are made based on our analytical reports, it is imperative that these management decisions be accurate and timely (T.O. 00-20-2). Credibility means reports and data should be checked and double checked. Another pair of eyes works great since the originator can easily get into a mind set concerning their intention to state, write, or display. With the widespread use of computers, it is easy for an analyst to use standardized spreadsheets that could have been developed inaccurately. Formulas or methods of computations change from time to time so we need to be on guard to ensure that our worksheets change according to regulations/manuals.
5.1.2. Be realistic. When asked for a special study, estimate when you can provide the study and then work to meet that suspense. Annotate their request, select a point of contact, compile the vital information, establish the purpose, determine the format to present the information (slides, charts, or letter format), and determine procedures required to meet the suspense. Attachment 10 is a sample Logistics Analysis Data Request.

5.2. Communication. Without question, this area is a very important part of an effective analysis function. Establishing sound communication rapport with all maintenance areas will go a long way toward making your job easier and more productive. Remember that close and frequent face-to-face contact between managers and analysts is the primary ingredient in successful analysis. Make sure you understand the question and that what you thought they said is really what you heard and what they need to fulfill their requirement. We must also have good communication both horizontally and vertically within the organization to ensure the accuracy of our data. The key is to be an effective listener as well as a speaker.

5.2.1. Methods of Communication: oral/verbal (face to face); written (notes, requests, e-mail); visual (spreadsheets, examples, etc.)

5.2.2. Keys to communication:

5.2.2.1. Formulate your questions so they can not be answered with a simple "Yes" or "No."

5.2.2.2. Listen to what the individual is saying - don't interrupt.

5.2.2.3. Process and evaluate the information.

5.2.2.4. Restate to the individual what you thought you heard.

5.2.2.5. Allow the individual to clarify any misinterpretation.

5.2.2.6. Present your facts and ask any remaining questions.

5.3. Responsibility. Your primary responsibility as an analyst is to provide information and analyses to all levels of management, thus using your statistical and analytical skills to convert raw data into meaningful information. Your assessments must be objective and answer the "why, how, when, and where" questions. You will interface with the Operations Group (OG) and Logistics Group (LG) and probably other maintenance work centers during your analyses and investigations. Although we serve the entire maintenance community, our loyalty must be to the LG. You must be responsive to mission needs and to the needs of maintenance managers while upholding integrity and timeliness of reporting. Your goal is to assess the organizational health of the unit and provide feedback to the decision-makers. You must develop ways to highlight problem areas that need management attention. Finally, you must educate maintenance managers about your abilities and capabilities. Don't be content to sit around and wait for direction. You are the troubleshooters. You must seize the initiative, using your imagination and technical skills to develop effective methods of implementing your expertise to improve the maintenance complex, i.e., be pro-active. The following is an example of how an analyst can be effective.

5.3.1. To be effective, you must basically analyze maintenance performance.

A beneficial starting point is a review of the previous months' flying and maintenance performances.

5.3.2. What did not meet expectations? Identify which indicators were deficient, then begin investigating. Most people yield too easily: the result will only be simple or shallow analysis.

5.3.3. Do not hesitate to say "No trend noted" but be able to support your conclusion with good analysis. Always remember, every and any subject can be explored to the point of becoming a special study, but doesn't always require such. Never give the quick answer.

5.3.4. Another way to be effective, gaining credibility, is to complete a thorough analysis that results in recommending a change to problem areas. Visit your maintenance sections; investigate problem areas; and search for solutions.

5.4. Marketing Your Services.

5.4.1. As an analyst, you are a vital part of your unit. But you can't help your unit if your unit doesn't know who you are or what you do. You absolutely must market your services, which are: analytical studies, trend analyses, database management skills, statistical extraction, etc. These are the subjects that analysts are trained to do and are uniquely qualified to do within a unit. No one (including: schedulers, training managers, flight chiefs, maintenance supervisors, or LG personnel) is able to analyze as well as you. Be proud of your services; they are golden. Treating your customers with respect listening to their feedback, discovering exactly their purpose, will minimize rework. Advise your customers, educate them; but don't force a one-product-fits-all mentality on them.

5.4.2. Examples of opportunities to market your services are: staff meetings, CAMS users' meetings and training classes, scheduling meetings, newcomers' orientations, and local maintenance meetings. Utilize every opportunity to spread the word, becoming part of the solution, not part of the problem.

5.4.3. You absolutely must get out from behind your desk. Get to know and be known by the NCOICs. You'll have a better understanding of your unit's needs and your customers will have better access to you.

5.4.4. Concluding, you must market your services, which are valuable contributions to your unit, which will result in making your unit more efficient, less costly, safer, and better.

Chapter 6

DATA INTEGRITY METHODOLOGY

6.1. Over the years, during which our career field was viewed as being divided into analysis and data base management, another little known split also evolved. It was believed that the only way you could have an effective analysis shop was to subdivide analysis into production analysis and deficiency analysis. The production section measured performance; while the deficiency section concentrated on reasons for poor performance; the deficiency section consisting of Engine, Avionics, and APG (crew chief) specialists. Mostly, quality assurance personnel assumed the responsibility of deficiency analysis. Usually, the quality assurance personnel ended up assisting the analyst with investigations. Their reputation as inspectors didn't help the analysis community because they were forced by their QA duties to "point the finger" a lot.

6.2. Webster's reference material defines a deficiency as either something lacking, a failure, a defect, or a flaw. Generally, that production vs. deficiency split still exists but who plays what roll takes some defining. Here's the best definition we know: The responsibility for analyzing production within a unit rests with each and every 2RO assigned. Likewise, so does the responsibility to analyze poor performance, translated as deficiency analysis. But, what do you analyze?

6.3. To do proper analysis requires a good reliable database. Accurate and timely data is essential as statistics are used as force health indicators. If the automated system goes down, problems are reported to a higher level for solution, and data is manually tracked until full capabilities are restored.

6.4. A Data Integrity Team must be formed to monitor maintenance data and recommend action on data documentation problems.

6.5. .The maintenance analysis branch oversees the DIT at each unit. The charter of this group is to assure the accuracy of maintenance documentation at unit level. The main objective is to educate managers and technicians on proper documentation methods and practices. This program is not a scorecard to judge any unit or individual. The desired outcome is to improve data integrity within the ANG, thereby making the Management Information System a viable tool for improving aircraft availability.
6.5.1. Team Composition: Maintenance Analysis is the OPR. Each branch will have a representative with at least a 5-level representative. The team will develop a system to measure progress and a method to ensure that data is reviewed and corrected.
6.5.2. Requirements: Each appointed supervisor will accomplish accuracy checks using printouts from screen #100 (at CAMS units) or program 8070 (at G081 units). The accuracy check will be accomplished by marking errors and annotating corrections on the printout. The following data elements will be checked as a minimum: Work Unit Code (WUC), Action Taken (AT), and How Malfunction Codes (HM), When Discovered (WD), and Start & Stop Times. Each MDC transaction will be checked to ensure that coding is according to 00-20 series technical orders; AFCSM 21-556 / 579 (CAMS) or AMCPAM 21-115 (GO81); and reflect the proper truthful entries. Narratives should be descriptive and portray actual actions accomplished. Errors found will be corrected in the applicable automated system. Once errors have been corrected, assistance is provided to preclude recurrence. Printouts are then filed for further reference and retained for a period of one year.

6.6. Maintenance Operations Requirements: The Squadron Maintenance Supervisor or equivalent will perform the following accuracy checks daily. AFI 21-103 status reporting, using data printouts, will be checked to ensure that maintenance and condition status codes reflect current status of each aircraft. WUCs will be checked to ensure that the actual component causing the status condition is being reported. Entries found in error will be annotated and corrected. The printout will then be sent to the DIT team leader for review and filed for further analysis.

6.7. Analysis Requirements: The assigned analyst will review and update program errors. Error data will be tracked and used for measuring unit progress. Data is monitored locally to determine problem areas and educate all personnel who document using MIS.

6.8. Consider the sort of areas you already measure that show unit production. For each area considered, a measure of how well the unit produced, there is also a down side for how the unit may have been deficient - an area where you might focus.
6.8.1. Flying Performance Effectiveness - How well did we meet our flying program? When it is not achieved, you might ask either: "Was the program realistic?" or "What caused us not to make the goal?"
6.8.2. Flying Scheduling Effectiveness - A measure of the scheduling efforts. You should concern yourself with the deviations that prevent you from executing an effective flying schedule. Do you have too many aborts? Why? There are many questions you should ask to explain emerging trends. You should be concerned with identifying and troubleshooting negative performance.
6.8.3. Aborts - Ground and air aborts hinder your effectiveness. What causes them? Stack your aborts by system, by tail number, etc. Keep records, track performance of each system and aircraft for comparison: mission capable, TNMCM, and TNMCS - the effectiveness and non-effectiveness of the aircraft we possess. What drives them? Fleet Time – how many aircraft are below 30% Time Remaining To Phase/ISO Inspection. Analyze high 10 reports from CAMS, track specific components. Material deficiency reporting comes to mind. These indicators help measure how well our maintenance practices and supply efforts are working toward meeting the mission. Dig into causes.
6.8.4. Cannibalizations - Are the procedures correct? Which components are having high numbers? Why aren't the parts available? What about seasonal variances?
6.8.5. Aircraft Breaks / Break Rates -. What causes aircraft to break? Analyze code 2 and code 3 pilot reported discrepancies for trends and other problems.
6.8.6. Fix times - ANG may measure either 4- and 8-, or 12-hour fix intervals on each broken aircraft in the unit depending on the type of aircraft assigned to your unit. When these time intervals are not met, you may want to determine why. Concentrate on the aircraft systems and components involved.
6.8.7. Issue Effectiveness - Although a supply indicator, it has a meaningful impact on the maintenance effort. A good analysis would show how the supply system at the unit impacts the unit cannibalization and mission capability statistics.
6.8.8. Repair Cycle - Off-equipment maintenance concerns would be how well the repair cycle process is working; examples follow. Which components require excessive pre-time to get into the cycle? Which require an extended repair time? Are they moving back to the line in a timely manner after repair or is this driving the unit to cannibalize items? This could also carry your analysis efforts into the overall 2LM program the unit may be involved in.

6.9. Example of a deficiency analysis effort gone wrong, made right.
6.9.1. An analysis office was showing slides to the Wing Commander on a regular basis. The Commander questioned the high steady level of TNMCS time during recent months. Nothing on the chart pointed to a negative trend. In fact, there was somewhat of a positive trend because the unit had recently resolved problems experienced due to shortages in specific engine components. This was coupled with inadequate phase dock facilities that had also been driving TNMCS several months earlier. Analysts noticed no negative trend in recent months.
6.9.2. During the investigation that followed, it was discovered that there was an unusual amount of time accumulated for tanker boom nozzles on order. Checking TNMCM, it was soon discovered that there was a correlating amount of maintenance effort to remove and replace nozzles. Further, a close look at pilot reported discrepancies in the most recent six months, showed a consistent amount of aircraft breaks for nozzle problems. Obviously, the TNMCM time tied in, so did the TNMCS time. So, what was the answer? You may have guessed at this point, the analyst went back to the Commander and announced that they had a boom nozzle problem. The Commander quickly responded with "I knew that, you didn't; now go find out why we have that problem and recommend a corrective action."
6.9.3. The analyst's obvious concern was that future prevention of the proverbial "getting caught with your pants down." The analyst, with deficiency analysis, told what had happened, then assigned each individual some deficiency analysis type duties to prevent a similar recurrence. One was charged to monitor system and component trends in status and one monitored pilot reported discrepancies for emerging trends. They learned that positive trends as indicators may not result in a positive outcome. Best of all, they began to talk to each other. They never had that sort of problem again.

6.9.4. Oh, you want to know how the story ends? Okay. It seemed that the only time the nozzles were breaking was while refueling F-4 aircraft flown by the German Air Force on refueling training missions. Their pilots simply were not fluent in English and barely understood the signals of the boom operator. Since the refueling nozzle on the F-4 is behind the pilot, out of his vision, he could not tell when he was disconnected. Consequently, the pilots would pull away when full and before the operator had made a disconnect, so the still embedded nozzle would break. Had someone in analysis been tracking breaks on a daily basis, they would have realized the existence of a possible emerging problem and avoided embarrassment. Fortunately, there was no major loss of life or property. Unfortunately, defense spending increases when you and I have the ability in this career field to locate problems and save valuable assets.

6.10. We analysts have the tools available. Many products in CAMS are dedicated to failure analysis, defect reporting, system reliability and capability, etc. Our job is to use them. What is the purpose of gathering so many bits of data if we do not analyze it? The world over concentrates solely on negative performance. This is the essence of analysis. Analysis determines causes for negative performance, which promotes positive performance. Good Luck!

Chapter 7

TRAINING

7.1. A sound, viable training program will make you money in the long run. A well-developed training plan ensures expertise when absences occur. Upgrade training is vital to skill level progression and promotion eligibility and selection. 2R0X1s must know both analysis methodology and DBM. That reality can occur only by having a viable training program.

7.2. To have an effective training program requires planning. You need several basic elements in your program:
7.2.1. A master Specialty Training Standard (STS) - The 2R0 Career Field Education and Training Plan (CFETP) fulfills this requirement.
7.2.2. A master Job Qualification Standard - The AF Form 797, completed with duties that are not contained in the STS or require further breakdown, satisfies this need. The AF Form 797 has 3 blocks, which state: "MAJCOM Directed Use Only." Complete these blocks with 3-, 5-, and 7-level tasks. List all office tasking on this form and write/type an X in the block if required at that level.

7.2.3. A Coding List - Make your own set. For example, X could mean 7-level upgrade training, code Y could mean 5-level qualification training. Cover all job positions such as equipment custodian, regular analyst, REMIS monitor, etc. You will actually mark your STS and 797 with these codes to show who has to know what. The easiest way to accomplish this is identify all tasks required for a position and call that A, all tasks for another would be B, and so forth. Physically code the STS and 797 masters so you will always know, and somebody else will know in your absence. Here's a sample:

Specialty Training Standard (STS) Coding Reference for Qualification Training (QT) and Upgrade Training (UGT)

- X - All 7-level personnel must be qualified on these tasks
- O - All 5-level personnel must be qualified on these tasks
- CO - Implies a task applies to an assigned CAMS Monitor
- RO - Implies a task applies to an assigned REMIS Monitor
- EC - Associated task applies only to individuals charged with responsibilities of Equipment Custodian
- TR - Only applies to individual designated as a Task Trainer
- TC - Only applies to individual designated as a Task Certifier

NOTE: For Upgrade Training, all core items are identified with an asterisk; these are circled in the record as required
AF Form 797 - Job Qualification Standard (JQS) Coding

- The "MAJCOM directed use columns" are coded 3-, 5-, and 7-level
- Those columns with X indicate that the respective level must be qualified on that task
- R or C coding preceding X indicates that the task is for REMIS or CAMS monitors only
- The task may also be coded with QT or UGT for reference

7.2.4. Task Knowledge Lists - These are lists for each training scenario. If you had a 7-level upgrade training, you would make a list of all STS core tasks, based on your coding in the master, and other tasks required of that person's daily duties. Also add in 797 items. Make a separate list for each different training requirement; i.e., 5-level upgrade, 5-level qualification, CAMS monitor, etc. Here's a sample:

Task Knowledge List for Qualification Training
Note: For Upgrade Training, include all items in STS identified as core tasks in addition to these items

- 7-Level Personnel - Sts Items

Item	Content
1	MDSA Career Ladder Progression
2	Security
3	AFOSH Program
4a(1-9)	Quality Awareness
4b(1-9, excl 3)	Coaching & Facilitating
4c	Quality tools and techniques
6	Supervision
7	Training
8	Maintenance Management
9	Inspection Systems
10	Utilize Microcomputers
18a	Use of the Analysis Process
18b	Data Reviews
18c	Meetings
19	Statistics
20a	Purpose of Predictive Analysis
20b	Types of Predictive Analysis
20e	Perform a Trend Analysis
21	Forecasting
22	Statistical Applications

- 7 Level Personnel - 797 Items

All items on the 797 apply except items 2 and 3, unless applicable to the individual based on responsibilities

7.2.5. Training Standards Lists - This is actually the meat of your program. For every item listed on a task knowledge list, describe the requirement, the level of training that you require for proper functionality within your office. For example, if you want your trainee to learn STS item 18c, Meetings, you might require the trainer to have the trainee prepare a special study and present the results to other office members. Grade the individual. You need a separate standards list for each training possibility. Here's a sample:

Training Standards
Part 1 - Sts Items for 5-Level Qualification Training

Task	Requirement
1	Demonstrate an understanding of Part I, Section B of the STS. This is an explanation of Career Progression.
2	Read and discuss applicable portions of AFI 10-1101 and AFSS 15100; state who Security Monitors are for OSS and OSOA.
3	Discuss accident and fire prevention for your office. Have trainee identify several basic tips; know reporting procedures.
4a(1)	Have trainee identify the ANG Productivity Goals and the LG/OG productivity Goals.

7.3. Now, put it all together in one master program file and put it into practice. Let's say you have two inbound people. One is a 5-level who just got promoted and requires 7-level upgrade training. This person will also need qualification training for the new office. The other is a 7-level, fully qualified, but has never worked in your command. What do you do? Look at each separately.

7.4. Meet with the 5-level, interview this person with their training records, and determine their present state of training. Transcribe the records to a new STS or change what is in the existing records accordingly. Don't hesitate to certify something if they know the subject already (and meet your standard), and don't hesitate to disqualify them in a task if you think that they need additional training in this subject, explaining why. Insert your office 797 in the records. Next, identify which code which you used to mark your STS and 797 masters to reflect tasks required for 7-level upgrade and qualification training. Then, circle the STS and 797 item tasks required for that person. You can conduct both upgrade and qualification training together since this individual requires only 7-level tasks. You would not want to train the person on 5-level qualification items. Appoint a trainer to the individual, conduct an initial interview with both, addressing your expectations and desired outcome, and hold periodic training meetings to discuss progress. A word about trainers. In today's 2R0 world, there are plenty of cross-trainees. Do not hesitate to use your qualified personnel as trainers, regardless of rank. The trainee is here to learn.

7.5. Let's examine the inbound 7-level. This person is already upgraded. Follow the same procedure you did for the other person but select the 7-level qualification tasks only. The main difference between the 5-and 7-level tasks might simply be that one individual can demonstrate, while the other individual can apply logic, interpret, and analyze.

7.6. Let the people that are fully qualified become task trainers and task certifiers for your office. There is no golden rule on who should do what. The bottom line is get your people trained. Build yourself a program and put it into use. Don't depend on schools to train your personnel for you. You must find a way to do it!

Chapter 8

SELF-ASSESSMENT

8.1. Self-assessment is a dynamic and continuous process used by organizations to improve overall operational performance. It is based on facts with a bottom up review of all key processes, products, and services within the organization. Assessors should identify the organization's key customers, outputs, processes, input and suppliers. Also identify the key requirements, performance indicators, and information systems used by customers and suppliers. Develop internal performance measures to assess customer satisfaction, supplier support, quality of products, and Maintenance Information System Integrity are just a few examples.

8.2. Unit Self-assessments are normally conducted annually. They assess the unit based upon seven major categories of the Quality Air Force Criteria, which are Leadership, Information and Analysis, Strategic Quality Planning, Human Resource Development and Management, Management of Process Quality, Quality and Operational Results and Customer Focus and Satisfaction.

8.3. The best way to assess yourself is to make a self-assessment guide based on responsibilities. Go through every responsibility you can find, group them into key areas, then make questions for yourself that can help you measure yourself. Most importantly, never design a self-assessment question that can be answered with a yes or no because that is exactly what you will do. Require yourself to perform a task of some sort, even if it is simply opening a file drawer, finding a letter, and recording the date and subject of the last special study completed by your office. Be tougher on yourself than anyone else could ever be. Focus on continuous improvement. Be the best that you can be.
For more information on this program and how it is performed in your unit contact your local Quality Office.

Chapter 9

MAINTENANCE CAPABILITY FORECASTING

9.1. Capability forecasting is composed of three parts; airframe capability, personnel capability and facility capability. All three are considered when determining the unit's capability to support the operational flying requirement for a specified month, quarter or fiscal year. The computation of airframe capability will determine if the unit's available aircraft can support operational requirements. Personnel capability computations will determine if the unit's workforce can support requirements, or if it can't, the shortfalls can be identified and actions taken to enable personnel to meet requirements or identify problems which are outside the unit's control, such as manning imbalances, skill level imbalances, etc. Facility capability computations will determine if you have the facilities such as phase docks, fuel barns, etc., to support the requirements.

9.1.1. The following is an example of a method of computing airframe capability for peacetime:

Airframe Capability Forecast, Peacetime Capability:

Basic assumption: the unit's maintenance policy of a 40-hour work week. Limited second shift for small servicing crews, and minimum essential maintenance personnel.

1. Other maintenance factor: Providing aircraft as necessary for a Maintenance Trainer, Munitions Load Trainer, Aircraft Wash, and Scheduled Maintenance Actions that can be accomplished in less than two hours.
2. Example, forecasting aircraft capability:
   a. Number of O&M days per year (excluding weekends & holidays): 208
   b. Average number of possessed aircraft: 15 (example)
   c. Historical MC Rate: 76% (12 - 30 months data)
   d. Turn factor: .88 (historically) (sorties flown – code 3 sorties)
   e. Average sortie duration (ASD): 1.6 (forecast)
   f. Flying envelope: 8 hours (typical averaged)
   g. Crew preflight time: 0.5 (measured)
   h. maintenance pre-flight time: 2.7 (measured)
   i. Other maintenance factor: (commitments): 15 aircraft (2-Shaw), (2-Alert), (1-Phase Insp.)
   j. Attrition rate: 8% (based on historic calculations, seasonally adjusted)
3. Computations: Using the calculated Break Rate/Reliability Rate to determine the turn capability and sortie reliability (turn) rate.
   a. Initial sortie capability = possessed aircraft minus other maintenance factor, times MC Rate, times O&M days per year.
      initial sortie capability = 15 minus 3 times .76 times 208 = 1897
   b. 1st turn aircraft available = initial sortie capability, times the turn factor (1) 1897 times .88 = 1669
   c. sortie capability: initial sortie capability + 1st turn sortie capability (1) sortie capability: 1897 + 1669 = 3566 sorties
   d. Projected sortie losses: sortie capability times G-Abort Rate
   e. projected sortie losses: 3566 x 0.05 = 178 sortie
   f. Maximum sortie capability: sortie capability minus projected sortie losses
      maximum sortie capability: 3566 - 178 = 3388 sorties
   g. Maximum flying hour capability: maximum sortie capability times ASD
      maximum flying hour capability: 3388 X 1.6 = 5421 F.H.
   h. Maximum sortie UTE rate: maximum sortie capability divided by PAI divided by 12
      (a) Maximum sortie UTE rRate: 3388 / 15 / 12 = 18 (rounded down)
      (b) Maximum sortie UTE Rate: 18 monthly sorties per possessed aircraft

9.1.2. The following is an example of a method of computing airframe capability for wartime:

Airframe Capability Forecast, Wartime Capability:

Basic Assumption: We would use all possessed aircraft to compute the maximum sortie capability.

1. Best Case Forecast: assumes all aircraft are at home station or if deployed will fly at the same OPS TEMPO. Note: This forecast does not provide an aircraft for a Maintenance Trainer, Munitions Load Trainer, Aircraft Wash, or Scheduled Maintenance Actions which can be accomplished in less than two hours.
2. Factors considered for generation of a sortie: (using example assumptions)
   a. Number of O&M days per year: 365 (full year)
   b. Possessed aircraft: 15
   c. Historical MC Rate: 89.4 (wartime manning scenario)
   d. Turn factor: .88 (100 minus the Break Rate/Reliability Rate)
   e. Average sortie duration (ASD): 1.6 (proposed)
   f. Flying envelope: 24 hours (wartime)
   g. Crew pre-flight time: 0.5 (measured)
   h. Maintenance pre-flight 2.7 (measured)
   i. Attrition rate: 8% (historically)
3. Computations: All results will be rounded to nearest whole number.
   a. Initial sortie capability: possessed aircraft times MC Rate times O&M days per year
      Initial sortie capability: 15 times .894 times 365 = 4895
   b. 1st turn aircraft available: 15 times .88 = 13.2
      1st turn sortie capability: 13.2 times .894 times 365 = 4307
   c. 2nd turn sortie capability: 13.2 times .88 = 11.6
      2nd turn sortie capability: 11.6 times .894 times 365 = 3785
   d. Sortie capability: initial sortie capability + 1st turn sortie capability + 2nd turn sortie capability
      (1) Sortie capability: 4895 + 4307 + 3785
      (2) Sortie capability: 12987
   e. Projected sortie losses: sortie capability times attrition rate
      (1) Projected sortie losses: 12987 x 0.08
      (2) Projected sortie losses: 1039
      (3) Expected sortie production: sortie capability minus projected sortie losses
      (4): Expected sortie production: 12987 - 1039
      (5): Maximum sortie capability: 11948
   f. Maximum flying hour capability: maximum sortie capability times ASD
      (1) Flying hour computation: 11948 X 1.6
      (2) Flying hour computation: 19117
   g. Sorties UTE Rate: (per assigned aircraft) sortie capability divided by possessed aircraft divided by 12
      (1) Sortie UTE Rate: 11948 / 15 / 12
      (2) Sortie UTE Rate: 66.4 = 66 (rounded down)

9.2. Facility Capability Formulas

9.2.1. Dock Flying Hour/Sortie Capability:

a. Number of inspections per dock = $\frac{\text{WDM}}{\text{Avg Dock Days}}$

b. Number of inspections per month = number of inspections per dock x number of docks available

c. Dock flying hour capability = number of inspections per month x inspection cycle

d. Dock sortie capability = $\frac{\text{dock flying hour capability}}{\text{average sortie length}}$

9.2.2. Facility Requirements/Dock Requirements:

a. Number of inspections required = $\frac{\text{flying hours scheduled}}{\text{inspection cycle}}$

b. Dock days required = number of inspections required x avg dock days per inspection

c. Number of docks required = $\frac{\text{dock days required}}{\text{work days per month}}$

Chapter 10

ANALYTICAL METHODS

10.1 A number of analytical methods are available and although each one has validity in a given situation. It is essential that the maintenance analyst have a complete understanding of the methods listed below. They must also have a complete understanding of statistics and their application as they apply to aircraft maintenance and related areas.

10.1.1 Visual Observation: This method is valid under certain conditions; however, its value depends upon experience and knowledge of the observer. It is also limited by the fact that the information retained is not generally sufficient for a meaningful description of a lengthy or complex situation. When used, this method should be complemented with other methods.

10.1.2. Comparative Analysis: This method may be performed statistically or visually and involves comparing two or more operations or items to identify variations or differences. Comparative analysis is an excellent first step in analyzing performance. While it can completely stand alone as a technique, it is generally employed with other methods. Care must be taken to ensure that like situations are compared.

10.1.3. Statistical Analysis or Statistical Investigation: This method is the methodical study of data. It is used to reveal facts, relationships, and differences about data and data elements and is a useful adjunct to comparative and visual analysis.

10.1.4. Analysis Process: This method is the methodical conversion (not collection) of raw data into a form useful for decision making and managerial control. It combines all three of the previous methods and expands the techniques involved to include research, investigate, identify, and recommend and follow-up. The combination and process expansion make it the strongest and most logistical of these methods. This method provides a full circle approach to problem solving.

10.1.5. Record keeping: Keep records of all the data and projects in a dedicated folder as a backup to your work.

10.2. ANALYSIS PROCESS:

10.2.1. The mission dictates maintaining a reliable weapon system through the effective and efficient use of resources. As an analyst, you possess the key to assist managers in placing things in their proper perspective. A note worthy of mention is that rates are not everything. For example, 100% flying scheduling effectiveness could be achieved but at what cost? A deviation may be the most efficient way at times. As an analyst, you should strive to keep management focused, and like the proverbial homemaker, your job is never done. From spot checking for data integrity, to key quality indicator measurements, from files maintenance to statistical computations, our process is technical and time consuming.

10.2.2. The analysis process is a 12-step approach and never ending cycle, so we symbolize it by using a circle (Figure 10.1). This is the process used by analysis to explore indications of performance.

The Analysis Process

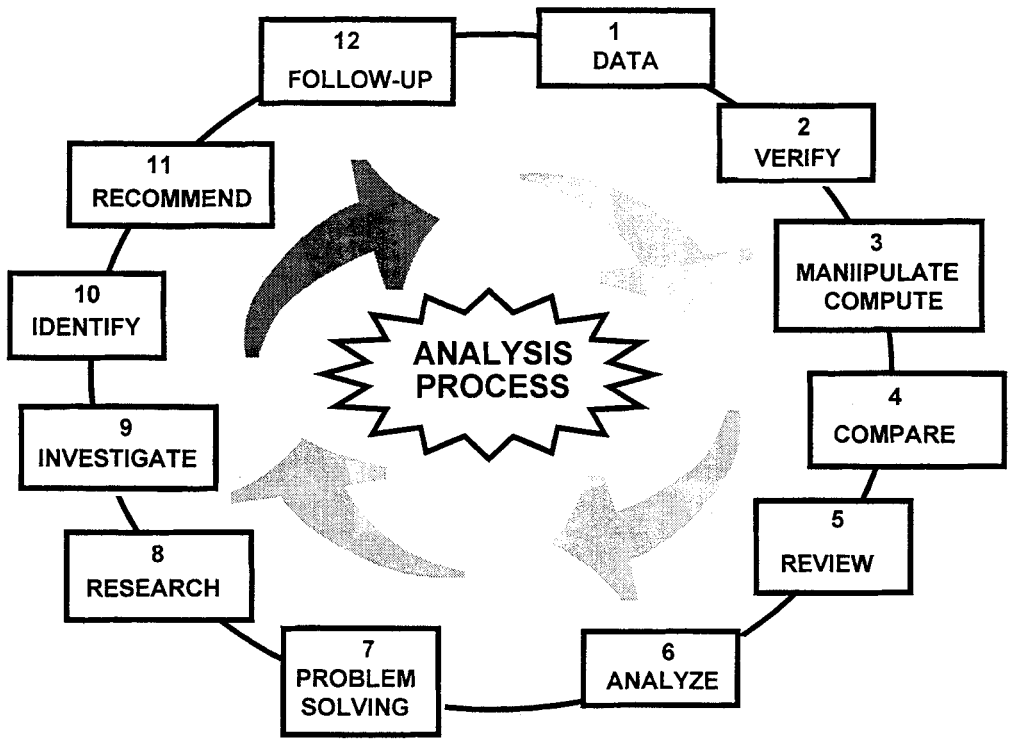

Figure 10-1

10.2.2. Effective analysts know where they are going, have a pretty good idea how to get there, and are careful not to get sidetracked along the way. They constantly remind themselves that their primary responsibility is to provide meaningful information to help managers and supervisors make good decisions. Remember, the maintenance mission is to maintain a reliable weapon system through the effective and efficient use of available resources. As an analyst you possess the key to assist managers in placing things in the proper perspective. That is your goal!

10.2.3. Are you accomplishing your goal? Don't answer too quickly! Gather the facts, all the facts. How do the facts compare with what you expected? Can you mold the facts to tell you a story? How do you think the story will end? What kinds of things impact your interpretation of the facts? Look at each of these things. Does something or someone else cause them? How, and why? If you do the above you will have just completed a thumbnail sketch of the analysis process. Success of this process requires you to be objective totally and without bias. This will allow you to fairly and accurately assess the condition of the organization and weapon system.

10.2.3.1. Step 1 - Collect Data.
The first step in the analysis process is to collect data. Data can be gathered from many different sources. The active analyst is constantly collecting data (information). In addition to those routine computer products, letters, schedules, and memos that pack filing cabinets, everything you see and hear is a potential input to the analysis process. Data collection itself is a three-phase process. Briefly, collection is merely a process of extracting, sorting, and grouping information. The statistics you need for local reports takes you through all three phases. Which reports to use? Which codes do I need from the reports and what are they? In reality, these phases don't occur in any particular order, nor can a line be drawn where one phase stops and the next starts. The important thing is that all three phases do occur. Usually, worksheets are required during the data collection process. The thought process that's required for building an adequate worksheet allows you to think through the three phases of data collection prior to beginning. Periodically, ask the age old questions: who, what, when, why, where, and how, these questions will lead most processes in various directions for testing outcomes.
10.2.3.2. Step 2 - Verify.
The verification step cannot be overemphasized! This is the first step that makes or breaks credibility. An error is the result of a missed verification step, whether it was verifying the raw data or verifying (proofreading) the output product. The verification step occurs many times throughout the analysis process, and it requires you to understand the data systems from which you draw your information. Cross-checking from various sources (when possible) should be done to minimize variances in data.
10.2.3.3. Step 3 - Organize/Compute.
When you have an accurate and complete set of data with which to work, you must put it into a usable form. This is the organize/compute step. Tables, charts, and graphs are normally accepted forms of presentation. In addition, you may have to compute averages, rates, percents, etc. Further, it's a good idea to scrutinize the formulas used to ensure that the information was calculated properly and is presented in a form most meaningful to those who use it. As you accomplish this step, always remember that organizing your data to tell the story at a glance may save you time later.
10.2.3.4. Step 4 - Compare.
With your data in usable form, you have your first opportunity to compare it with standards, past performance, or expected results. This comparison is a relatively simple one. Is the trend stable, increasing or decreasing? Are there more deviations than expected? Were goals achieved? In making those comparisons, you will get an idea of the kind of questions that need to be answered.
10.2.3.5. Step 5 - Review.
While asking yourself simple questions about the data, you will probably come across some data that need extra explanation. Basically you want to provide additional information in any areas that raise obvious questions. By reviewing the data in this manner, and providing those answers, you're saving yourself the time spent having to re-accomplish it when the inevitable questions are asked. Your answers - or extra input - could come from the same source that you used in the first step of this process, they could come from other sources, or they could come from your personal knowledge as an analyst. Many analysis products will be completed at this stage of the analysis process. Prior to releasing these products (charts, reports, slides, etc.) another review of the material is required to ensure accuracy. This review may be accomplished by asking a coworker to review the output products.
10.2.3.6. Step 6 - Analyze/Interpret.
It is at Step 6 of the analysis process that you determine which statistical tests best fit your data without distorting its true meaning. Now that you have gathered, verified, organized, compared, and reviewed your data, you must now determine if you need to proceed further in the analysis process. Analyzing is nothing more than a logical interpretation. The success of this thinking process is dependent upon your knowledge of the organization, your understanding of the statistics, and finally, your experience. Let's examine the last three items since the first one has already been discussed.
10.2.3.6.1. Knowledge of the organization - be familiar with the makeup of your organization. This includes: the structure of the unit (who is responsible to whom?), the mission of the unit (overall objective), the responsibilities of each agency within the unit (how the system should work), the goal of the unit, and knowing the key people.

10.2.3.6.2. Understanding the statistics - do you know what the information/study tells you? What are the elements that make up a particular statistic? Are they meaningful? What effect does a change in one element have on the statistic? What is the probable error in variance? What effect does a change in one statistic have on the values of other statistics? How accurate are your sources of data? If you understand your statistic, you can properly apply it. How does this result compare with other units with like equipment? If you have that understanding, you will reduce the risk of making statements or forming conclusions that are not valid. You are the statistical expert in the organization. The thorough and questioning analyst will deliberately examine and cross-examine the utility, meaning, and application of each statistic used.
10.2.3.6.3. Experience - the final element required for successful interpretation (analysis) of your data deals with personal experience. Personal experience is "learning by doing." In this process it applies to logical thinking (cause and effect). Logical thinking is a learned skill, and by developing it (based on past mistakes), your analyses (interpretation) will be meaningful.
10.2.3.7. Step 7 - Problem Solving.
The completed analysis generally provides for making one or two statements.
10.2.3.7.1. "My analysis indicates no problem." (The only way to get managers to accept this is by developing credibility.)
10.2.3.7.2. "My analysis indicates a problem does exist." If you make the second statement, you will have entered the problem solving step that is an integral part of the analysis process. Problem solving techniques will lead you through a step-by-step approach to defining the problem and laying the groundwork for further analysis. Select a method of problem solving that works best for you. One method might be: State the problem, gather data, list possible solutions, test the possible solutions, and select the best solution, act, and follow-up. Several types of problem solving methods may be found in your CDC material and statistical methods books.
10.2.3.8..Step 8 - Research.
Once you have determined that a problem does exist you are no longer doing a simple analysis. You are starting an in-depth study that will require additional research. This research generally involves gathering additional information which you will need to understand the problem fully. That may mean studying technical data, instructions, operating instructions, or basically trying to find out what others say about the problem or factors that surround it. It may mean reviewing job control logs, shop logs, memos, and other sources of information. Research means gathering all needed information, and every office on the base maintains information that could possibly aid in the problem solution. Ask yourself "What information do they have?" and "Can they help me solve the problem?" The point is that there is more to analysis than data printouts and quality assurance reports. After you have gathered the additional information, you must verify, compare, analyze, etc., to determine the value of the additional data. At this point you should have a better idea as to the root cause of the problem.
10.2.3.9. Step 9 - Investigate.
This step will likely make you get out from behind the desk and visit the people in your organization. Ask questions and solicit ideas, follow up on statements (verify), and if you need technical help from quality assurance or other agencies, call on them. Evaluate all the information that you have obtained and if you've been thorough, you can be reasonably sure that - you know why the problem exists. By this time the problem may have begun to disappear; however, a thorough investigation will determine if the problem has been truly solved, or if temporary (stopgap) measures have been applied. Even if the problem has been solved, complete the analysis process, document your findings, and inform management.
10.2.3.10. Step 10 - Identify.
Too often the analyst gets so involved in chasing all the other problems discovered during the investigation process that the main objective - identifying the cause of the problem - is forgotten. Throughout the course of your study, keep your objective in sight. And when you reach the point of forming your conclusion, identify those deficiencies that cause the problem to exist and document your findings.
10.2.3.11. Step 11 - Recommend.
Since the first step in the analysis process, you have been formulating possible solutions. Now you must pick the best one and recommend appropriate action. After all, you've been working the problem from the beginning and you may understand the problem, the causes, and the effects better than anyone else.. If you presented your study meaningfully, management should adopt your recommendation. But if they do not, don't worry. Your objective was to identify the cause and provide a logical explanation.

10.2.3.12. Step 12 - Follow-Up.
No analysis is complete without adequate follow-up action. Regardless of the product (analysis, study, or referral), follow-up action is necessary to complete the analysis process. Follow-up itself is an analysis and could start the entire analysis process again because it:
10.2.3.12.1. Tells management whether or not they have chosen the proper action in response to the problem.
10.2.3.12.2. Can better define the actual cost of those actions.
10.2.3.12.3. Measures the success or failure of both the original product and resulting actions.
10.2.3.12.4.Measures the effectiveness of the analysis process.
10.2.3.12.5. Provides results that generate effective management practices.
Methods used in follow-up are no different than those used to produce the original product. This may seem extreme and taxing, but it doesn't require the degree of effort that went into the initial output. Continue to track all significant data/information used until you determine that the problem has undergone a long-term fix. Document your follow-up actions and inform management of the results -- both good and bad.

10.3 Major Studies or Special Studies: Studies are the ultimate analysis effort. Through study or in-depth analysis of any subject, an analyst can wade through problematic symptoms and eventually get to the root cause. Once the true cause has been identified, the long-term fix can be initiated. An added benefit of a study results from overall depth of the effort. Normally, more than one problem will be pinpointed through this effort. To gain the most in this area, turn your analysts onto any problem or subject of importance and give them the time that they need to investigate. You should be provided a recap of all findings, associated problems (or symptoms), a definition of the most apparent root cause of the problem and a logical recommendation for improvement.

10.4. These are the basic functions that can make your analysis system a useful adjunct to decision making. Raw data is extremely limited in its usefulness to the organization. But meaningful analysis can interpret that data and mold it into a viable management tool. "It is better to understand a little than to misunderstand a lot." Anatole France.

10.5. How To Perform an Analysis Study. All studies involve answering six basic questions.
(1) Who is having a problem?
(2) What has happened, what can be done about it?
(3) When did this happen?
(4) Why is this happening?
(5) Where does this happen?
(6) How to correct it?
10.5.1. How well you answer these questions will decide how good a study it will be. If you don't answer all six questions, you have not really accomplished a study. You may have collected masses of data, but only when it is systematically used to answer these six questions have you actually analyzed the situation and completed the study. Basically, here is what each of the six questions should involve:
10.5.1.1. Who are you doing the study for? This section is part of the Purpose: Examples might be: To investigate the perceived increase in failures of the F-15 IMU at the unit level and determine if a problem exists.
10.5.1.2. What has happened? This section is titled, Assumptions and Limitations. This is when you state what you think are the assumptions, such as, the number of cannibalizations for system 46XXX (fuels) has a significant trend for #1 fuel boost pump over the last 24 months or the number of cannibalization for system 46XXX (fuels) has no significant trends. This is when you identify what you believe is the problem area to investigate. You must decide how many months of data to use, what type of data, should it be looked at across the whole wing or a single flying squadron, should it be limited to the #1 boost pump or look at the whole fuel system? These are all limitations and are necessary to keep your study focused and manageable and to eliminate unnecessary information.
10.5.1.3. When, why, and where is this happening? This is the Investigation and Findings area. Investigation: this is where we start to peel back the apple and get to the core of the problem. This is where you solicit information from supervisors and technicians in the appropriate areas to provide any facts that might shed light on the study, such as, technical orders which are not accurate, special tools needed, skill level imbalances, etc. Findings: once you have assembled all your facts from the data and investigations, you need to state the hard facts about the information, tell what you did and what you found. Keep it concise and if you have reached a conclusion don't state it here. Build your case by a logical progression of supporting facts. After you have built your case on the facts then you can state your conclusions in the next section of the study.

10.5.1.4. What were the causes of the problem? This is the Conclusion. This section is exactly that; your conclusions based on your findings. There may be more than one conclusion from the study. In some cases the conclusion may be that there is no problem. In every case, however, you must be able to arrive at some conclusion from your efforts.
10.5.1.5. How to correct it or what should be done about it? These are your Recommendations. They should be in line with your conclusions. If you conclude that there is no problem, it does not make sense to recommend a corrective action. On the other hand, if you have effectively determined why something is happening, then you should be able to recommend some action to correct it.
10.5.2. The bottom line for an effective study is that simply crunching numbers will never answer all six questions. Data, statistics and investigation techniques will help to support your findings. An effective study must use both the technical expertise of Maintenance Data Systems Analysts and Deficiency Analysts to ensure a combined effort of data analysis and maintenance investigation. Working as a team and answering all six questions will make an effective study easy, productive and rewarding.

10.6. Maintenance Analysis Referrals: Referral reports are generated by local managers or by your Maintenance Systems Analysis Section. They are used to start investigations of possible problem areas and to find solutions. Problem areas may first appear from trend analysis when control limits are exceeded or from performance data that does not meet established standards. For control purposes, all referrals must be routed through Quality Assurance. However, copies of referrals initiated by analysis should be on file. Problems identified should be significant and worth the cost to investigate. Referrals should not be limited to JDD/MDC accuracy. Remember, if the real cause of the problem is not identified, a lasting fix will not occur.

10.7. Report Formats: Output products are the results of investigations, analyses, audits, recurring reports, and studies. Most people are familiar with the recurring reports published by analysis. But what about the other output products? What about the narrative assessment about that study on anti-skid problems or the CAMS audit? What type of format should you expect? The following is an example of one format type:

- Objective
- Background
- Scope
- Discussion/Assumptions
- Findings
- Conclusion
- Recommendations

10.8 Objective: What you're trying to accomplish.
10.8.1. To determine if the suspected problem is isolated to certain aircraft or fleet-wide, or normal seasonal variation.
10.8.2. To measure the relationship between conditions (temperature) and specific problems.
10.8.3. To uncover and interpret any trends in system reliability, maintenance practices, training and technical proficiency, or supply support.

10.9. Examples
10.9.1. Background - (Who initiated the study and when)
Example: The Operations Group Commander directed this study on 12 December 1995. There is concern over the increase in anti-skid discrepancies by both aircrews and maintenance managers. Maintenance analysis and quality assurance were tasked to study and determine the extent of the problem.
10.9.2. Scope - (How far did the study go)
Example: This study was done in two phases. The initial phase was statistical analysis of discrepancies over the past five years. The second phase was a complete tail number analysis.
10.9.3. Discussion/Assumptions - How are things normally done?
Examples:
10.9.3.1. Maintenance is required to check this item during preflight and thru-flight.
10.9.3.2. Debriefers are specifically asking about this system (checklist item).
10.9.3.3. Statistical analysis of data from FY94 - FY98 used for this study included the following:
10.9.3.3.1. Regression analysis of system reliability with deseasonalized trend data to determine trend direction and rate of change. Kendall K test to determine probability of significance of the trend.

10.9.3.3.2. Correlation analysis of temperature versus number of discrepancies observed (FY94 thru FY98).
10.9.4. Findings - List each finding separately and explain
Examples:
10.9.4.1. Only modest correlation between temperature and anti-skid problems.
10.9.4.2. Most of the increase due to normal seasonal variation. Trend was not significant but was slightly higher than normal.
10.9.4.3. Discrepancies are fleet-wide. No significant number for any single aircraft.
10.9.4.4. QA reports show increasing numbers of discrepancies in this area.
10.9.5. Conclusion - Summarize facts to answer objective of study
Example: The increase in anti-skid problems is mostly seasonal. However, the trend is increasing slightly indicating other forces are contributing. There is an increasing number of discrepancies in this area for QA inspections indicating a possible training or supervisory deficiency. A more thorough assessment of QA inspection history is required.
10.9.6. Recommendations - What would you do if you were the LG?
Examples:
10.9.6.1. LG emphasizes potential problem to pilots and maintenance managers.

10.9.6.2. QA increases emphasis on inspections in this area.

10.9.6.3. Analysis/QA assesses inspection history for possible trends.
10.9.7. Follow-up – see if improvements occur. A follow-up on any changes should occur following corrective measures. The changes should be measured against the pre-corrected information.

Chapter 11

PRESENTATION TECHNIQUES

11.1. Choose the Chart to Fit the Data: Use line charts to represent information flow that changes over time, such as, mission capable rate. Use bar charts to compare individual data points, like fighter squadron's comparisons, and pie charts to show proportions, such as, aborts by system. Use organizational charts and flowcharts to diagram relationships and processes, respectively.

11.2. Format Charts for Legibility: Distinguish bars by using solid contrasting colors or simple hatch patterns (black and white printouts. Don't mix diagonal shadings--they create dizzying optical effects. Limit pie charts to no more than 10 parts. Use minimum grid lines and reference points to make the graph readable. They should float unobtrusively behind solid areas. If charts are crowded, simplify them by suppressing alternate reference points. Use heavier solid lines to delineate the most important series.

11.3. Use Tables to Organize Detailed Data: Charts are visual displays of relatively small amounts of data, but tables are a more effective way to show lots of detailed information in a small space. The use of both together is especially useful when audience members may need to access and compare many individual data points.

11.4. Use Text Lists for Simple Information: Keep to the rule of six: Follow each bullet or number with no more than six words and use no more than six lines per slide. Don't underestimate the usefulness of builds, which can help you reveal progressive levels of detail or sequential points.

11.5. Use Appropriate Line Weights: Dark lines on light backgrounds tend to look like they are receding, so make them thicker; conversely, light lines tend to come forward on dark backgrounds, so use thinner line weights in such circumstances. This rule applies to typefaces as well: Use thicker, bolder text on light backgrounds and vice versa. Don't let chart lines get too thick, though, or your reference points may be misinterpreted.

11.6. Use Color to Convey Information: Emphasize important points by setting them in contrasting color, and key the audience into relationships by showing similar objects in similar colors. To avoid confusion, don't use more than six or seven colors in all, and don't use more than four colors for text slides. Use brighter colors for small items and illustrative graphics. Set standard design rules for multiple graphic presentations. Be sure to reserve the most vivid colors for emphasis and use them sparingly.

11.7. Fit the Background to the Occasion: For slides shown in a dark room, use light objects on a dark background. Dark cool colors (like the blue family) are best, but you can also use very hard warm colors (oxblood or dark green, for example). For overheads shown in a lighted room, use dark objects on a light background.

11.8. Combine Colors Carefully: Foreground and background color combinations need high contrast for visibility, so don't combine red and green, which are indistinguishable to those suffering from the most common form of color blindness. Most audiences seem to prefer blue, green, purple, orange, and yellow, in that order. Avoid vibrant colors, such as magenta, which is too hard on the eyes. Also, avoid exposing your audience to large areas of bright color, which will tire the eyes; bright red is the worst offender, light blue the most restful.

11.9. Format Text for Readability: On a dark computer screen or slide background, bright yellow-green text stands out the best; white and bright yellow are also quite visible and easy on the eyes. Use neutral, dark shadows to increase text readability on color gradient backgrounds. Use one or two (at the most) different typefaces for heads and other text elements. Don't use similar serif or fonts in the same presentation.

11.10. Compensate for Screen Resolution: Text displayed on a computer screen is less legible than printed type, so you should compensate by using simple letter shapes without delicate serifs for on-screen presentations. Examples of highly legible fonts include Helvetica, Futura, and some of the simpler bolder fonts designed specifically for laser printers and computer screens. In addition, chart text should be no smaller than 1/20 the height of the chart, versus 1/50 for slides.

11.11. Use Movement to Advantage: You can use the dynamics of a screen presentation to convey the direction of information flow. For example, you'll show more detail by zooming in on an item; and you can effect a smooth concept transition with a dissolve or fade. To move to a new concept, try fading to black between slides. Use animation to highlight key points, to suggest change and movement, to show changes in physical properties, or to illustrate how a device works. Last, you can use video clips to show objects in real time, if you're presenting data about a new facility, for example, or illustrating a new maintenance process.

11.12. The Real Secret: Keep it simple and use special effects sparingly. Get to the point quickly. The only way to get comfortable with presentations of this type is practice. You have to spend time trying different colors, with different fonts, on both your computer screen and your projection equipment. Time invested in advance will pay huge dividends on presentation day.

Chapter 12

TREND ANALYSIS

12.1. General.
What is trend analysis? The determination of the direction a set of portrayed data is taking. It's what we're trained for. Our technical schools and CDCs give us guidance on how to do this. For the Logistics Group managers who rarely have time to look past the next day's flying schedule, this can be an eye opener. They need to see and understand current trend data on any problem areas. That's why we have a Logistics Group dedicated analyst for their specific needs. Sometimes all that is needed are WAG statistics/analysis. It's simply a matter of retrieving and providing information. A Wild Approximate Guess (WAG) is an opinion and not a fact.

12.2. Time Series Analysis.
Trend analysis is more accurately called time series analysis. Our CDC defines a time series as a systematic arrangement of observed occurrences of data by some constant of time. For example, the number of landing gear failures for each month. The CDC goes on to define trend as the variation that's almost always displayed by the values in a time series. There are generally four types of trend variation. These are secular, seasonal, cyclical, and irregular variation. The only ones I'll cover in this book are secular and seasonal variation. Secular variation is caused by the general forces of nature and is the most common type of variation. Seasonal variation is variation that occurs over periods of time shorter than a year. All variation occurring over short periods of time may not be seasonal but most will be. To do time series analysis you must have at least 24 values in the series. You need 5-7 years to do a good seasonal analysis. When we do time series analysis there are two questions we must answer. What is the direction of the trend? Is it significant enough for concern? Seasonal trends can be shown against other seasons to show significance.

12.3. Testing Significance Of Trend.
We use Kendall's K test to test the significance of trends. It will tell us the trend direction (increasing or decreasing) but not how much (slope of the regression line). You don't have to compute and plot a regression line unless you want to display the data and variation graphically. You can analyze the trend with just Kendall's K test. Two conditions must be met before you can use this test. First, you should use at least 24 values. Second, the data must be from a scale that can be ranked.

Chapter 13

CONTROL CHARTS

13.1. General.
This chapter covers four types of control charts. There are others, but these are the only ones we've found useful in analysis. Control charts are very often misused by analysts simply because the analyst doesn't understand which type to use. What most analysts know about control charts is that you compute the standard deviation and mean average for your data. Then you draw a chart with the mean as the centerline and set control limits at three standard deviations above and below the mean. Well, this is the correct way to construct a chart for individuals but not for the other types. We've seen analysts use this type of control chart to plot monthly abort and mission capable rates. This is not an appropriate use of control charts. All types of control charts are constructed the same way. They have a centerline, an upper control limit, and a lower control limit. The primary difference is the measure of variability used and computation of the control limits. This chapter will explain the uses and give some practical applications for each type of control chart discussed.

13.2. Purpose.
Analysts use control charts to monitor variation and to detect the presence of assignable causes for variation. Assignable causes are those you can identify and which management can minimize or eliminate. For example, they could be errors in reporting, an aging component, or a bad batch of parts. The control chart won't always detect assignable cause. There may be too much normal variation and the control limits ineffective. But control charts are good analysis tools and are our best method of statistical quality control.

13.3. Control Limits.
Most analysts remember from school or CDCs that you set limits at three standard deviations from the mean. Do you know why? When we select a control limit we're basing it on an assumed risk or probability that a certain amount of the data being measured will fall within those limits. For example, we know that in a normal distribution, 99.74 percent of the data will fall within three standard deviations above and below the mean. If some data fall outside these limits we know that there's only a 0.26 percent chance that the reason is due to chance causes and a 99.74 percent chance that it's due to assignable causes. There is a theorem in statistics called the Empirical Rule or Normal Rule which states that approximately 68 percent of the data falls within one standard deviation of the mean, approximately 95 percent within two, and approximately 99.7 percent within three standard deviations from the mean. But this is only true for symmetrical or normal (bell-shaped) distributions. You can use the normal curve area table to work backwards too and set your control limits based on a probability set by you. For example, let's say you want to set your control limits so that if the data fall outside the control limits you're 97 percent sure it is due to assignable causes. Look at the normal curve area table until you find 0.4850 (half of .97 or 97 percent). Remember that the normal curve area table shows data on only one side of the mean. See that 0.4850 corresponds to 2.17 in the z columns. So set your limits at 2.17 standard deviations from the mean. If you can't find the exact number you're looking for pick the closest one.

13.4. Interpretation.
How to interpret control charts is not an exact science. There are probably as many ways as there are applications. You and your experience at your particular application will be the best judge of that. Just remember you're trying to identify anomalies for investigation. Some ways to tell are::
13.4.1. One or more points exceed control limits.
13.4.2. Too many points on one side of the centerline. (Exp. seven consecutive points, 10 of 11 points, 16 of 20 points, etc.)
13.4.3. Appearance of adverse trend.
The method that you choose will probably be determined based on your experience and the amount of time available for investigations.

13.5. Types Of Control Charts.
We'll cover four types of control charts. These fall into two categories, charts for variables and charts for attributes. Charts for variables are used when quality is expressed as a variable. For example, man-hours to change a component, mean time between failure, mean sorties between tire failures, etc. Charts for variables require that you first quantify the data. The two charts for variables we'll cover are charts for individuals and charts for averages. Charts for attributes are used when items can be placed into categories based on some observed characteristic. For example, pass or fail, the component either worked or failed, accept or reject, etc. The two charts for attributes we'll cover are P charts (also called p bar charts) used for percent defective and C charts (also called c bar charts) for number of defects. The Charts for individuals is used for plotting individual values. It uses the mean average as its centerline and standard deviation as its measure of variability. It's useful for but not limited to measuring repetitive type maintenance jobs or inspections where measurements are made in terms of man-hours or clock hours to complete a task. You should use it if you want to monitor every single action or if you don't have enough data to use a chart for averages. A disadvantage to this chart is that the values need to be fairly symmetrical (from a normal distribution) because the control limits are based on an assumption that the sampling distribution values came from a normal distribution. So, if the distribution you're trying to measure is skewed, your interpretation of the chart will be distorted. Application of this type of chart is simple. If you want to monitor how long a work center takes to perform a certain task (i.e. bench check an item in the shop), gather your past data (sample distribution) and compute the mean and standard deviation. Make a chart and then plot each job in the order they occurred. If jobs fall either above or below the control limits, I'd want to know exactly who did those jobs. If there's a trend it could indicate that someone is very good at this task or very bad. It could also mean someone might be taking short cuts. Or it could be a newly assigned person in training. But if the new individual is the problem and he's been here for a while, then your original sample is skewed and your control chart may show nothing unusual. So back up a few months and take another sample. Then, measure the jobs from that point forward. Think, be creative. Whatever the reason, identifying the trend and its cause is what you get paid for. Let's not go into detail about constructing this chart because the CDCs provide excellent guidance in the construction.

13.6. Standard Deviation.

Since you'll probably never deal with whole populations in analysis we'll cover sample standard deviation. Standard deviation, as you should know, is one of the measures of dispersion. Others include range, average deviation, and variance. The standard deviation is also the square root of the variance. But you knew that too. Most calculators and electronic spreadsheets on computers have function routines built in to calculate standard deviation. If these are not available it's still a relatively simple task. There are two methods of computing sample standard deviation. Since we're not sure which one you'll see in school or CDCs, we'll cover both hoping you'll recognize one or the other. Both require setting up a table and making a few calculations. Then substituting values into the formulas and solve. Below are the formulas and tables with sample data. The steps are selfexplanatory. Just take a few minutes to look them over. Method I is also called the shortcut method.

METHOD I:

X	X^2
4	16
2	4
5	25
4	16
5	25
2	4
6	36
28	126

METHOD II:

X	X-X	$(X-X)^2$
4	0	0
2	-2	4
5	1	1
4	0	0
5	1	1
2	-2	4
6	2	4
28	0	14

$$X = \frac{X}{7} = \frac{28}{7} = 4$$

s = 1.53 s = 1.53

13.7. Charts for Averages.

These are used for measuring the same types of data as the charts for individuals. But, instead of plotting every value, you plot sample means. Don't confuse this chart with the bar x or mean chart. Charts for averages are useful when you're monitoring random samples of large population distributions or monthly rates. It uses the same centerline (mean average) but uses the standard error of the mean as its measure of variability instead of standard deviation. So at least you won't have to compute standard deviation, right? Well, guess again. Standard error of the mean uses standard deviation in its formula. In fact, it's just one extra set. Compute the sample standard deviation for your past data. Since we're dealing with samples, let's assume that your past data includes 5 samples with 10 values in each sample. Compute your mean average and standard deviation from the entire 50 values, then use the following formula to compute standard error of the mean (S).

$$S = \frac{S}{\sqrt{n}} \qquad S = \frac{S}{\sqrt{n-1}}$$

(Sample >30) (Sample <30)

13.8. P Charts.

You can associate P charts with percent defective. That is, the percent (or proportion) of your sample that is defective. A defect is an error or discrepancy in an item, which detracts from quality. Defects are not measured but counted. They either do exist or do not exist. Let's say we're doing CAMS audits or reviewing QAP reports. These are both types of inspections and we're looking at pass and failure rates (percent defective). If you're monitoring QA inspections, you'll want to convert pass rates to failure rates. If the pass rate for FS personal evaluations is 85.5 percent, then the failure rate is 14.5 percent. The centerline of the P chart is not affected by changes in sample size but the control limits are. In fact the control limits are different for every plotted value on a P chart. This doesn't mean that you have to recalculate control limits every time you plot a value. You should only do this when a plotted value comes close to one of the control limits. Generally, the P chart works just like the other control charts we discussed. You calculate and plot a centerline and upper and lower control limits based on historical data. As long as the plotted values are closer to the centerline (or norm) than the control limits (extremes) then no worries. When a value falls outside the control limits or comes close to the control limits, then you need to recalculate the limits to see, if indeed, the value is out of control. Some values may fall outside of the straight-line control limit but when you recalculate it might actually be within limits. The opposite might also be true of a value that falls very close to the control limit but appears to be still in limits. That's why you must check any that are close. The formulas for the P chart are:

$$CL = \overline{P} = \frac{\text{Total Number of Defectives (all samples)}}{\text{Total Number Inspected}} \; X \; 100$$

$$UCL = \overline{P} + 3\sqrt{\frac{\overline{P}(100 - \overline{P})}{n}}$$

$$LCL = \overline{P} - 3\sqrt{\frac{\overline{P}(100 - \overline{P})}{n}}$$

Where: $\overline{P}$=Average percent defective or centerline value

n=SampleSize

An increase in sample size causes the control limits to move closer to the centerline. A decrease in sample size causes the limits to move farther away from the centerline. Keeping this relationship in mind can save you the trouble of recalculating control limits every time a value falls close to the control limits. For example, let's say the upper control limit is 20.5 and the value you're plotting is 20.3 percent. You know that the normal sample size is 65-80 but this time it's 120. Now remember that an increase in sample size causes the control limits to move closer to the centerline. You don't even need to recalculate. The value is out of control. If the sample size had been 45 then the control limit would move in the other direction and the value would not be out of control.

13.9. C Charts.
The C chart is different from a P chart in that it plots the number of defects rather than percent defective. It is used to measure the discrepancies found during an inspection. For example, the number of write-ups on a QA inspection. We keep referring to QA examples because these are, after all, methods of statistical quality control. The sample size for your C chart must always be the same and the opportunity for defects must not change. The centerline is the average number of defects per unit inspected. The C chart formulas are:

$$CL = \frac{\text{Total number of defects}}{\text{Total number of inspections}}$$

$$UCL = CL + 3\ CL$$

$$LCL = CL - 3\ CL$$

Control limits on the C chart serve the same purpose as on the P chart. A point outside the control limits indicates the presence of assignable cause for variation.

CHAPTER 14

DETERMINING SAMPLE SIZE

14.1. General.
We don't normally use sampling techniques in our day-to day analyses. If we want to know the average time it takes to complete a task we don't sample 150 of 4,000 jobs. We average all 4,000 jobs. There is, however, one application of estimating sample sizes that all analysts should use. That's estimating sample sizes for inspections.

14.2. Proportion Estimates.
Sound like more QA stuff? It is. Although this has application in the QA division, we do quality control inspections too. We audit CAMS to ensure that man-hours are being documented correctly, to ensure that work unit codes are being used correctly, etc. When possible we use all of the data. But there will be times when you'll have to settle for sampling. Let's assume that we're going to compute sample sizes for QA to determine how many inspections they should conduct each month. The formula for computing sample size is:

$$p = \frac{\text{Selected margin of error}}{\text{z score from the normal curve area table for the selected confidence level}} = \frac{5}{2} = 2.5$$

$$n = \frac{P(1-P)}{(p)^2} = \frac{.955(1-.955)}{(.025)^2} = \frac{.042975}{.000625} = 68.76 \text{ rounded to } 69$$

Where: P = The historical pass rate
z score = 1.96 or (2) based on 95% confidence level

The way we compute this sample size is in 5 steps.

Step 1: Determine the historical pass rate. (P)
Step 2: Select a margin of error. (Ex. + or - 5)
Step 3: Select a confidence level. (Ex 95% or 99%)
Step 4: Find z score in normal curve area table for selected confidence level.
Step 5: Compute sample size.

Let's say the historical pass rate for personal evaluations is 95.5 percent. We want a margin of error of no more than 5 percent and a 95 percent confidence level. That takes care of steps 1-3. In step 4, we don't have to look this one up because we already know that the area associated with 95 percent under the normal curve is approximately two (1.96) standard errors of proportion. So we compute the sample size to be 69 inspections. Now let's say QA completes 69 inspections and the pass rate is 92 percent. This means that we can be 95 percent (confidence level) sure that if QA inspected all of the jobs, instead of just 69, the pass rate would be 92 percent, + or - 5 percent. So we have a good representative sample of the overall health of the unit. What if QA only did 20 inspections? Then the confidence level would have been around 70 percent. That means that even though we achieved a 92 percent pass rate for 20 inspections, the confidence level is too low to believe it's a good representative sample of how well the unit is performing maintenance. Now keep in mind that if you computed this for five different work centers, you'd end up with 69 inspection for each. Of course that's unrealistic. The 69 inspections are for the entire wing. QA will have to decide how to distribute them across all three squadrons. But remember, these procedures apply to random samples only.

Chapter 15

KEYS TO RELIABILITY ASSESSMENT

15.1. What is your perception of a "maintenance data analyst?" I use the word perception loosely in this question because of the extreme differences in definitions applied to a maintenance data analyst and more precisely maintenance data analysis. Are you a statistical clerk, a data analyst, a data base manager, a historian with a specific objective in mind or a manager? What is maintenance data analysis?

Maybe you think these are easy questions to answer. If you do, we congratulate you and solicit your paper on the subject for future cross feed. To understand why these questions are important, take a look back, not so many years, and recall where we (analysts) have been.

As a starting point let's look at the 1950's and early sixties. Technology was in its adolescent stage and growing up fast. Advances in aircraft, space vehicles, communications, in this era, there wasn't a group dedicated to the sole art of analyzing information. We were one deep then and remain one deep today in most cases. That's progress?

As the weapons systems increased in complexity, the ability to manage them became more demanding and increased the need for management support disciplines. An organization could no longer rely on a seat of your pants approach to management. Management was becoming as specialized and as technical as the equipment itself.

With the advent of specialized management came the cry for information. Information to assess day-to-day and long range performance, information to plan, to control, or to enhance an operation. Initially information agencies were established to gather and present data to manage by. Later they were called upon to predict. Predict!?? How can one predict without an understanding of collection methods, the management philosophies driving the data collected, or the proper techniques used to interpret data and project future performance? Formulation of guidance and technical training followed, unfortunately not as fast as the need for more information and more ways to use the information. It was a slow process. First we used technicians, then career specific personnel to open the doors to analysis. We then added automation and automation support to the analyst mission because it appeared to be the logical step. But there was a problem, as basic as it may seem and it still exists today. That problem is the interface of analysts with management or the utilization of analysis within a management structure. Sure, we have

governing directives that establish basic responsibilities for the analysis elements. But these responsibilities or tasks are commonly dedicated to the maintenance of the information systems, not the collection and presentation of indicators representing the norm. However, this is only one facet of analysis, so we are back to the original question, "What is maintenance data analysis?"

To try to answer this question, we need to look at it from two sides. First, your perception of what analysis is, as an analyst, and second, management's perception of what analysis is. Once again I use the key word perception. For if you perceive yourself as a data gatherer, and publisher, and that is how your manager perceives you and your function; then that in fact is all you are. On the other hand, if you perceive the collection and publication of data to comply with the norms and utilize it as a starting point for analysis, then you are on the road to becoming an analyst. Management's perception of your analysis program will, in most cases, parallel your own perception.

Analysis by any definition is not a fine art. No one has a patent on it and guidance on an effective approach to analysis has been limited at best. Those of us who consider ourselves professional analysts use the educational tools provided to us, factor in experience, expand our education and experience, capitalize on professional reading, learn from past successes or failures and keep the management objectives and quality goals in mind to provide the best analysis program possible. Analysis is of no benefit if management does not respond to the input. If they don't respond, your program is out of tune with management needs and should be revised. With this in mind lets state that, maintenance data analysis is the art of analyzing maintenance information and presenting the results to management for appropriate action. We realize that this definition is ambiguous, because it is intended to be. Management needs vary from organization to organization; therefore, each analysis program will vary.

The organization determines what kind of analysis program your element will support and ultimately what kind of individual analysts the people assigned will become. For example, working at Air Force wing level, analysts are exposed to nearly all facets of the analysis field. At one time or other you perform Reliability, Maintainability, and Availability (RM&A) analysis, logistics analysis, suitability analysis, repair level analysis, management analysis, and personnel analysis. In the Air National Guard, we need the ability to do these functions when called upon. The key is in understanding specifically what particular type of analysis you are doing and to what degree you are doing it. If you had not realized that you do all these types of analysis and are not familiar with the finer points that make them unique unto themselves then your professional program could use some work.

Although reliability, maintainability and availability are each important elements of life cycle cost and performance, you need to address each separately and with varying degrees of importance when dealing with mature weapon systems. Reliability is measured in terms of how long an item functions/operates before it fails. It is this function that should be monitored closely and reported faithfully.

By far the best gains in weapon system improvement after production are in the area of component and system reliability. Reliability is also the best indicator to use in defining requirements for fielded systems and if the systems are currently meeting mission needs.

Maintainability is a factor mostly influenced during the product design phase and can not be easily changed after full scale development and production. Therefore, the degree that maintainability can be influenced after production is limited and should be secondary to other areas of possible improvement.

Availability is typically a result of the combined component reliability, maintainability, number of spares procured, and the length of the logistics support pipeline (i.e. repair concept, transportation, and handling). Changing the number of spares, repair levels, or transportation processes can easily influence system availability. However, the cost to gain improvements may be prohibitive by only changing this portion of RM&A equation.

The bottom line is that most of us have been indoctrinated to analysis on basically the same level; however, through evolution of the career field, our experiences, and education, we have developed our skills independently. From this independent development we must strive to overcome some of our shortfalls as analysts. Specifically, recall a key word used earlier in this paper, "Predict"; predictions are always requested and we always try to come up with some prediction of were we are going to be in the future, as the word implies.

We haven't been real good at predicting the future because we haven't been provided the statistical tools to support predictions in the past. Most of the statistical tools we are familiar with are very effective in determining the significance of past performance but, typically their effectiveness ends there. As a result, predictions are a problem for the analyst. There is another problem that is associated with predictions. Predictions don't tell you if the results are good or bad. What good is a prediction or comparison of current performance if we can not state what the requirements are? Without knowing the requirements, direct performance measures, or estimates of future performance, are nothing more than nice to know data elements. The crucial step in assessing performance or assigning significance of past performance is therefore limited in effectiveness unless it can be compared to known requirements.

Chapter 16

MANAGEMENT INFORMATION SYSTEMS

16.1. Management Information Systems (MIS) are the foundation for data pertaining to utilization and expenditure of unit resources. These systems provide the main source of information used by analysts to assess unit performance and capability. The Core Automated Maintenance System (CAMS), CAMS for Airlift (GO-81) and the Reliability and Maintainability Information System (REMIS) are the prime sources of data.

16.2. CAMS/GO-81

These data input/retrieval systems are large, dynamic, on-line system used at base-level to manage aerospace vehicles, trainers, Automatic Test Equipment (ATE), selected Support Equipment (SE), and Communications-Electronic (C-E) equipment, production, and personnel resources. AFCSM 21-556 / 579 covers system operation.

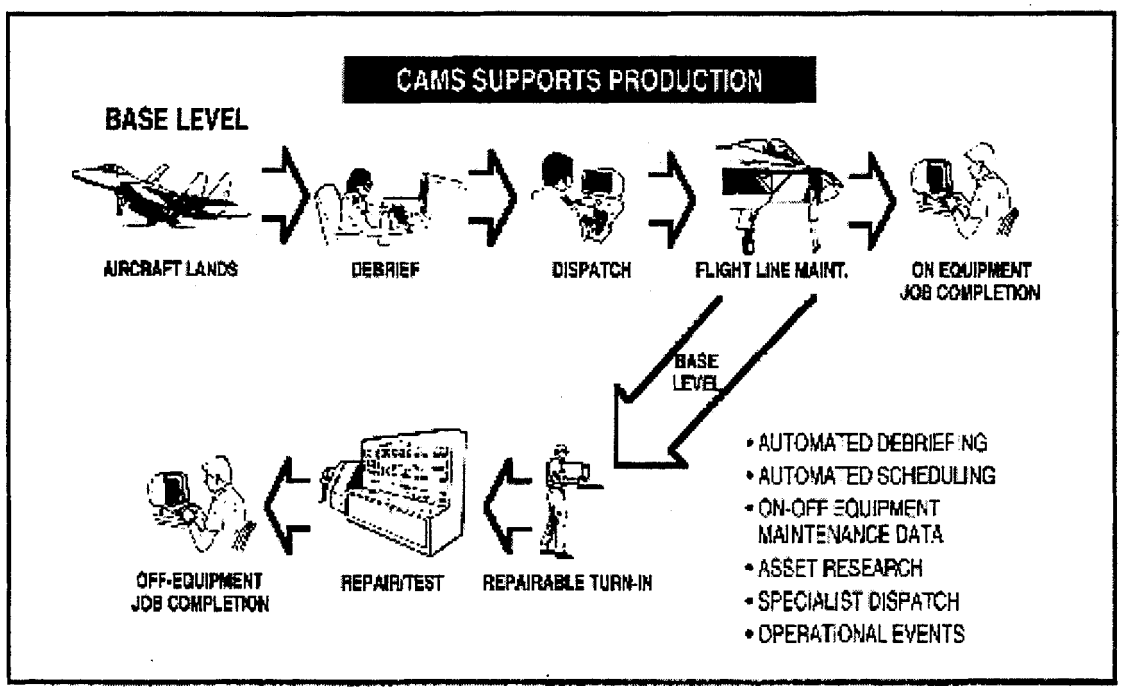

Figure 16-1

CAMS provides the capability for maintenance personnel to communicate to a central, base-level or regional-level computer via remote terminals in selected maintenance work areas. CAMS/GO-81 is an event-oriented system. In most cases, data is entered to update the database as a result of some activity taking place in the maintenance environment. The database maintenance functions provide the capabilities to enter new data, change existing data,

and delete erroneous and obsolete data from the database. Extensive editing of input transactions is accomplished programmatically to ensure that only correct data is entered into the database. Retrieval from the database is dictated by the needs of the functional user. It also provides the logistics data needed by major commands, Air Force Materiel Command, Headquarters USAF, and other agencies to manage and track maintenance resources worldwide. The system applies to aircraft, missile, and Communications-Electronics (C-E) maintenance.

16.3. REMIS

REMIS is the approved source for weapon system data to support reports to the Department of Defense and Congress. It is a central common source of all unclassified maintenance and logistic information for AF weapon systems and relies on accurate and timely data inputs. REMIS provides accurate, "near real-time," on-line data for tracked aircraft and equipment. It provides system managers, item managers, AF logisticians, and engineers access to reliability and maintainability (R&M) data. The REMIS R&M data is used to help increase the mission readiness of existing weapon systems as well as to help design R&M into systems under development. DOD, AF, and MAJCOM managers also use REMIS. REMIS provides accurate, up-to-date information on equipment location, configuration, utilization, and availability. This data helps improve the predictability of a weapon system's performance in peace and war scenarios.

REMIS is functionally divided into four high-level functional areas. Three are software subsystems and the fourth includes the "CORE" programs. The REMIS subsystems are: (1) Equipment Inventory, Multiple Status, Utilization Reporting Subsystem (EIMSURS), (2) Product Performance Subsystem (PPS), and (3) Generic Configuration Status Accounting Subsystem (GCSAS). More in-depth descriptions of these functional areas are found in AFCSM 25-524. CAMS/GO-81 provides base- level information to REMIS via an electronic interface.

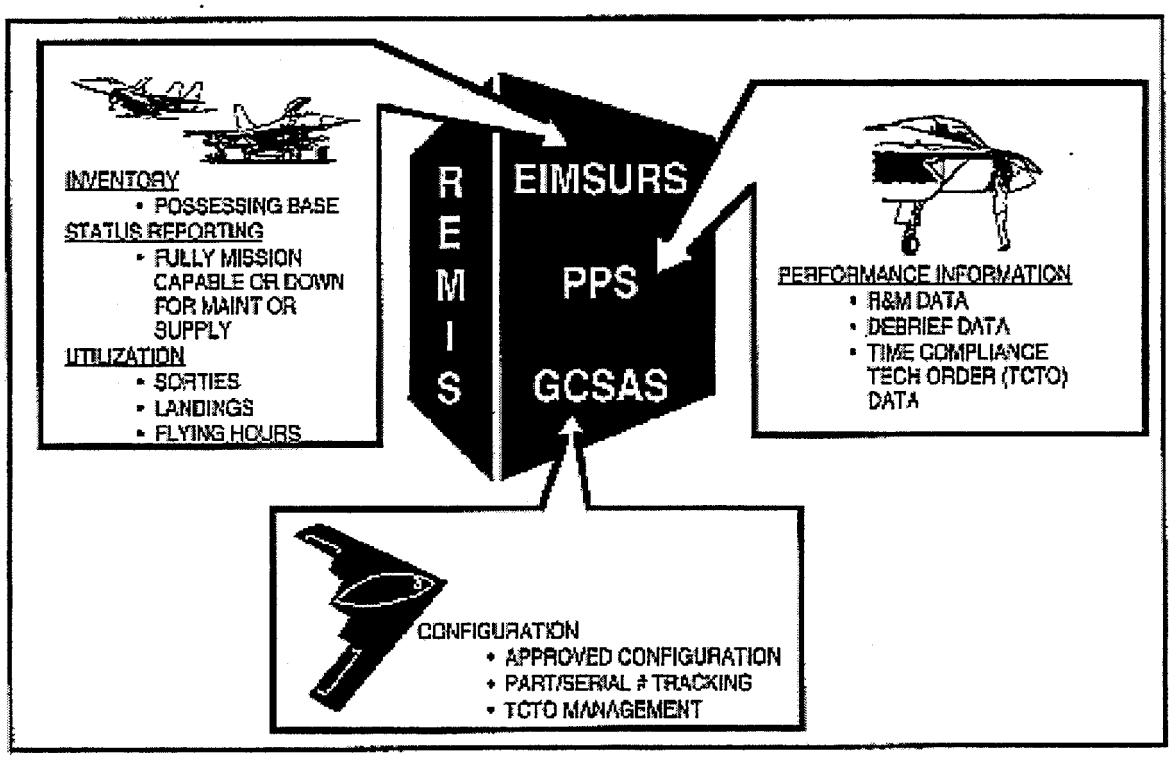

Figure 16-2

16.4. Documentation Accuracy and Completeness:

Given, two vital Management Information Systems (MIS) are used to collect information on unit operations, it's time to stress the importance of accurate documentation. All personnel in the unit are involved to some extent in the documentation, processing, review, retrieval, or application of maintenance data. The data entry made by a technician becomes an element in the data base used for management decision making. If that entry is incorrect, it

could have an impact on the decision made, since the data it was based on is now less sound. Each section chief is responsible for reviewing work center CAMS data entries for job accuracy and completeness. We must remind ourselves that this information is not only used at the base level but at all levels of command.

MAINTENANCE PERSONNEL AND PAPERWORK SEEM TO MIX LIKE OIL AND WATER SO YOUR CONTINUED INTEREST IS NECESSARY.

16.5. Data Integrity Teams:
These are teams established to evaluate documentation practices in CAMS/GO-81 that may be causing data integrity problems. These teams are set up at each unit to monitor data integrity. The team is composed of Maintenance Data Systems Analysts and representatives from operations and logistics squadrons. Maintenance Data Systems Analysis is the OPR for the team. The purpose of the team is to identify and correct areas, which are causing data integrity problems. Discussions should be positive, discourage conversations about why it can't be done and focus on ways to make it happen.

16.6. Maintenance Data Documentation (MDD):
The Air Force began the collection of data on base-level maintenance activities through MDC in 1958. The MDC system was developed to provide management with the means to assess equipment reliability and effectiveness of the Air Force maintenance effort. These two broad categories can be directly related to a significant portion of the Air Force budget and to the readiness and sustainability of combat forces. Effectiveness is measured through the MDD system in the form of personnel productivity, and operating and support costs. Reliability is measured as a function of the number of failures reported and the flying or operating hours for aircraft or equipment. Maintainability can be measured as a function of the man-hours required to troubleshoot, order parts, and make repairs. The MDD data are used as a measure of the reliability and maintainability of current weapon systems. Reliability and Maintainability are key factors that influence weapon system design, effectiveness, logistical support and life cycle costs. Collection of MDD is intended to provide a critical information feedback system to managers at all levels. Various levels of management throughout the ANG, Air Force and Defense Contractors use MDD. At base level, it was designed to assure effective management of maintenance resources, such as, tools, equipment, skills and personnel production. Agencies above base level use the data as a source of assessing performance and support requirements of Air Force weapon systems and equipment.

16.7. Examples of Base-level Uses:
- Production information on the type of work performed, work centers performing the work, and equipment on which work was performed.
- Equipment status and inventory evaluation.
- Discrepancies: scheduled, unscheduled, deferred, closed or opened.
- Direct labor expenditures.
- Equipment/System/Subsystem/Component failures and discrepancies.
- Cost to maintain aircraft, engines, and equipment.
- Information to estimate maintenance capabilities.

16.8. Examples of Major Commands (MAJCOMs) and Air Force Materiel Command (AFMC) Uses:
- Identify reliability and maintainability data on assigned equipment.
- Establish priorities for product improvements and modifications.
- Track modifications and evaluate effectiveness.
- Track reliability of systems/components.

- Validate inspections and time change requirements.
- Validate and adjust calibration intervals.
- Validate spares requirements.
- Evaluate unsatisfactory materiel reports and modification proposals.

16.9. Examples of Contractor Use:

- Relate the performance and support requirements of current weapon
- systems to the development of new weapon systems.
- Design easier to maintain systems and determine support equipment requirements.
- Establish Mean Time Between Failure criteria for new weapon systems.
- Integrate new technology into design.

16.10. Introduction to the World Wide Web

16.10.1. The entire Air Force, in addition to the rest of the world, is currently utilizing the Internet (the information super highway, the world wide web) as a method of conducting day-to-day business and operations. If not at present, it will soon become important that you gather a basic working knowledge to access their information in order to keep pace and become informed. Soon, organizations such as MPC, CAMS, all MAJCOMs, and most installations will be in full web production status. Your ability to access the latest information will be most important because most agencies are making an effort to use the highway to make information available.This document was written to give you the basics that you need to know in order to access the web and be a productive participant. Let's review some terms:

- Addressing - This is the line of code you must usually type in to access a document on the web. It looks like http://www.place.htm
- http - This stands for hypertext transfer protocol, the language used to access documents.
- http:// - The required lead in to most addresses. When you communicate with others, it is best to say "the address is *whatever*", without having to say "http colon slash, slash" first. They know that already. However, it would not apply in all cases such as FTP.
- FTP - File transfer protocol. Means the ability to move a file or piece of software from one computer to another; you will want to do this to transfer information, or to allow others access to copies of your documents.
- ftp:// - The lead in addressing format for FTP addresses.
- Links - Usually, on a web page, anything you see in blue, where everything else is in black lettering. When you click on the links, they actually take you to the linked document. Links are simply compete addresses such as http://www.document.htm
- HTML - Stands for hypertext markup language, the language web pages are written in.
- HTML Tags - Sets of characters designed for writing web pages. For example, <B> means start bolding what comes next, and </B> means stop bolding at this point. The tags are transparent to the viewer. An entire document can be formatted for viewing by simply placing a <pre> tag at the beginning and a </pre> tag at the end. HTML beginner's documentation is available from magazines, bookstores, or the web.
- Browser - The software you use, whether built-in or stand-alone, to look at web documents. America On-Line, Netscape, Microsoft, etc. have built into their software. For your purposes in the Air Force, Microsoft Internet Explorer is pretty much the standard for use.

16.10.2. How might you build a web page? You must learn the HTML language coding reference. There are numerous types on the market. We suggest you don't venture into this area until you practice browsing the web and fully understand what it is you see. You will notice in your efforts that many pages look alike and many have some really great features such as table formats, or even clickable pictures which link you to another place.

16.10.3. How do you actually browse the web? First, find Microsoft Internet Explorer on your computer. Your LAN administrator should be able to help you. If not on a LAN, it is doubtful you can even get this ability because you would have to arrange with an Internet service provider for access. From home, you can practice with one of the major on-line services mentioned at a reasonable cost until you gather enough information for better software and capability.

16.10.3.1. Once you have accessed the WEB, review the "Hot lists." These are actual links that will take you to certain sites. Review your Options Preferences to see if you are satisfied with the way it is setup on your computer. When it opens, it will automatically load any page you setup as the default address in the preferences. Assuming none loaded, you can type in your own desired address to access a document. If you wanted to go to the Military Personnel Center at Randolph, you would type in http://mpc.af.mil. Watch the turning world icon in the upper right hand corner of the screen. As long as it is spinning, the page is still loading to your computer. You can stop it by clicking on it. Use the directional buttons in the menu bar to go back a page, forward, to reload the current page, or click the down arrow to look at any previously viewed address.
16.10.3.2. Some useful WEB sights are:

- ANGRC is, http://www.ang.af.mil.
- HQ ACC is, http://www.acclog.af.mil/LGP/LGPA/LGPA.htm
- HQ AMC is, http://www.safb.mil:81/HQAMC/AMCHOME/
- CAMS Home page is, http://www.ssg.gunter.af.mil/FAB/

From these pages you can link to many useful sights.

Chapter 17

DATA BASE MANAGEMENT

17.1. Data Base Management (DBM): The Maintenance Data Systems Analysis DBM provides management control of the Core Automated Maintenance System (CAMS).

17.2. Duties and Responsibilities: Management of CAMS is performed through coordination with users, Defense Mega Center, and Network Control Center. They ensures the DMC supports all requirements concerning the operations and maintenance of the CAMS. They coordinates periodic saves of CAMS files to prevent loss of data caused by computer failure. They notifies users of any CAMS problems. They also ensures that system security is maintained. They provides technical support to tenant users. More detailed duties and responsibilities are contained in ACCI 21-101 Chapter 6, AFCSM 21-556 Vol 2 and AFCSM 21-571 Vol 2.

17.3. CAMS Subsystem Managers: Each CAMS subsystem is controlled by a specific subsystem manager who ensures that their personnel are qualified to use the CAMS and are current with AFCSM 21-556 / 579. A list of subsystems and who is responsible for them are contained in ACCI 21-101, Chapter 7.

NOTE: The following checklist is an example of how one unit performs their DBM functions. It may be adapted, adopted or used for bench marking purposes.

Table 17.1. Checklist for Unit Performing DBM Functions.

- Background Product Requests (Other than DBM runstreams)
Host & DBM
-- Build New Runstreams & Maintain Recurring Runstreams - *The DBM section is the POC for this step. However, Analysts in the Analysis section can accomplish this step as required.*
-- Schedule & Process (Unscheduled & Scheduled requests)
-- Print / Download & Distribute Products
-- Quarterly Runstream Review - *This runstream review is a quality initiative to ensure we're meeting our customers needs. Each customer reviews their requirements and updates them accordingly. This step is used in addition to customer initiated changes.*
- On-Line Requirements
Host -- Daily Duties

--- Check UVRXP in TIP - *We verify the applicable dates.* --- Ensure BOD date is current --- Check ICI switch (should be set to up) --- Validate SAVE --- Check Save Listing, ensures all Database areas were saved
Host --- RRP (RRO) & subsequent ADDRESS files - *This step is important to maintain an ongoing list of CEMS sequence numbers. The CEMS sequence numbers are for units that don't use direct line reporting.* --- Units using CAMS for reporting of engine status to CDB should: ---- *Ensure NFS27E listings are sent to Engine Management Branch* ---- *Correct any NFS27R errors ASAP* ---- *Ensure Address Run Summaries (PCN SS024-506) are sent to the Engine Management Branch*
Host --- RDT - *RDT is a carry-over from pre-DDN file transfer. We monitor it and make sure the dates stay current because it's still on the system.*
Host --- Monitor CAMS/SBSS - *Every morning and regularly throughout the day, we test this interface and make sure it's working. For this step, you must have a good working relationship with the SBSS computer room personnel.*
Host --- Process RLPA6ALL - *After reviewing the RLPA5 output and printing or reviewing the needed print files, we "clean" up this output. Files you should review include: 4FP, 4PP, 3IP, 4QP, 3NP, and files other users have processed. We don't print the listings. Instead, we use IPF to call up the listing file and check them for errors.*
Host --- Review 4PP Listings - *These files are especially important to make sure PQDRs are going out when they're processed.*
Host --- Check CAMS E-Mail (IPM (X.400))** ***It is highly encouraged that you call the FAB and have your X.400 E-Mail auto forwarded.***
Host ---- Review 4FP listings - *These listings show the MDC code tables downloaded from REMIS to CAMS.*
Host ---- Notify affected units of changes - *We notify our tenant units when their WUC tables are updated so they can run new CCL listings.*
Host --- GCSAS - *This only applies to units who are using GCSAS for configuration management. We've dedicated one DBM as the GCSAS "guru."*
Host ---- Process in approved tables and actual tables as needed.
Host -- Monthly
--- RDT - *Same as the daily requirements, but this is processed manually.*
--- NDA500 - *This is one of a three-step program we use to verify database structure integrity. It is processed* ***at the beginning of each month.***
--- WAH - Monthly Man-hour Summary - *No explanation needed!*
- **Off-Line Requirements**
RPC – REQ -- Daily 1FS Data Base Save - *We process our own saves. We use an automated process to switch between a "Static" dump and a "Dynamic" dump each night.*
Host --- CDH - Comm. Delete History
Host --- DMU Area Verify - *This is the second of our three-step process to verify database structure integrity. It runs at the end of each month.*
Host --- CAMS Down Day Runs - *We integrated most of our "major" down time causing runs so they run one day each month. We schedule the runs on a Saturday each month. The actual dates are projected a year in advance (FY). The dates are coordinated so they don't affect flying days and tenant unit UTAs.*
Host ---- SHM - Significant Historical Maintenance
Host ---- DUM - Detailed Utilization Maintenance
Host ---- DLH - Delete History
Host as Req -- Quarterly DMU CALC Verify - *This is the third program in our three-step process to verify database structure integrity. We process it at the beginning of each quarter.*
- **DBM Section Support**
For Analysis Office Only
-- Order RLP & Side-by paper

-- LP Store items (Printer ribbons)
-- Maintain Supply Log - *We maintain a log so we can review our purchases. This allows us to provide a more accurate forecast of requirements.*
-- Provide Host/Tenant Support IAW Agreement with ANG or AFRES units

- **CAMS Down Time**
-- Scheduled Down Time Notification – *Yearly and as required, we project our scheduled down time and notify our customers.* **As Required**
- **Quarterly CAMS User's Group Meeting**
As Req -- Schedule - *Along with the survey, we provide an open forum for comments.*
Req -- Compile Meeting Minutes
Req -- Distribute – *Annually (at a minimum), distribute copies of our survey to every customer. This is a quality initiative to track customer satisfaction levels. Also, it's a forum (aside from the phone) to provide anonymous feedback.*
- **System Advisory Notices (SANS)**
Host -- Obtain & Print - *Currently, we use two avenues to get SANS. The first is the FAB Diagnostics system at Gunter. The second is the X.400 (IPM) mail system.*
Host -- Distribute & Comply with - *Each SAN is reviewed for whom it affects and any steps needed to comply with it. SANS are distributed by E-Mail or BITS. We don't distribute to our ANG/AFRES units. They have the capability to retrieve SANS for themselves.*
Host & DBM -- Maintain SAN File - *SANs are maintained in either ACTIVE or INACTIVE status. We use the FAB Diagnostics list to determine the status rather than use the time frame printed on the SAN.*
Host -- Maintain HUM & PAN files & distribute as required. (Access through the CAMS Home page.)
- **Difficulty Reports (DIREPS)**
Host -- Research & Compose
Host -- Submit, Distribute, & File
Host -- Maintain DIREP File (Review & Discard) - *DIREPs are maintained as either VALID or INVALID. After completed and INVALID DIREPs reach their time limit (6 months), we discard them.*
- **Software Releases**
Host -- Obtain & Review - *Copies of the release are sent to every tenant unit.*
Host -- Coordinate - *After coordinating with the RPC, we notify our customers of the date and time for the release load. Print doc files and comply with any pre-steps necessary.*
Host -- Process & Review - *When the release is loaded, we spot-check the program version dates and accomplish any steps needed before the system is brought back up.*
Host -- File
- **ADPE Equipment Custodian**
DBM -- Inventory
DBM -- Equipment Movements
DBM -- Compose, Submit, & File AF Form 3215
Host -- Update NAPZ00 & Local Data Base
- **Hardware Problems**
Host Duty In Depth -- Troubleshoot - *We're the front line for troubleshooting CAMS hardware problems. This is especially true since we still have quite a few old SVTs and printers.*
Host -- Equipment Repair & Replace
- **Communication Line Problems**
Host -- Coordinate line troubleshooting through the BNCC to the Megacenter.
Host -- *We maintain a log of all communication line problems we call into the BNCC. This allows us to track jobs through the process and make sure they get fixed.*
- **Terminal Area Security**
Host -- Physical Terminal Security - *This includes the Terminal Area Security Officer (TASO) program.*

Host --	USER-ID/Password ** ***Maintain a copy of all DISA Form 41***
Host ---	Issue - ***Not only do we issue*** *UIDs from our office, we attend "Right Start" briefings for the Maintenance Squadron and distribute them there.*
Host ---	Call the BNCC to have UIDs reset as required.
--	TRIC Security
Host & DBM ---	Loads - *After coordination with our subsystem managers, we developed a base line TRIC security list and applied it to CAMS users.* ***We don't restrict any inquiry screens or options.***
-	**Special Report Requests**
Host & DBM --	Document - All *special requests for data is documented on an in-house form and filed.*
--	QLPs - *QLPs are written, compiled, and processed by all trained personnel within the office. It isn't just a DBM function.*
--	IQUs - *Same as QLPs.*

ADDITIONAL HOST DUTIES

Major Release Conversions:

Accomplish Pre-conversion steps for schema changes

UDS Monitor:

Utilize the UDS Monitor to check for problems

Chapter 18

THE DEPLOYED ANALYST

18.1. MOBILITY COMMMITMENT:

Any analysts desiring a change of pace should try deployments. You will experience everything from bare base operations to adjusting to a foreign country's customs and culture. Most units have a mobility commitment so it needs to be incorporated into our analysis readiness.

18.2. READINESS:

Two areas are involved: personnel and equipment. Analysts must be trained, qualified, and ready to go, also computer equipment must be dedicated to accompanying the deployed analyst. A checklist is essential to ensuring deployment readiness, otherwise essential items such as regulations and tech orders are apt to get left behind.

18.3. ROLE OF THE ANALYST:

Besides your primary analysis duties, you can expect to assist in a variety of jobs while deployed. You may be detailed, temporarily, to provide support services. The point is that you will be in a new environment and will have to adjust and adapt to some changes. The flip side of that is that you, the analyst, still have duties to perform or else you should not have been part of the deployment.

18.3.1. You will probably encounter drastic opposition to documentation and trying to do business as usual. However, lessons learned at deployed locations directly affect future real world scenarios. Problems that cannot be worked on location must be forwarded to parent wings and higher headquarters as soon as possible.

18.3.2. One tendency that has been noted during deployments is that personnel do the minimum "just to get by and get it over with." This attitude may not affect one time deployments, but when it applies to rotational commitments its effect is felt long range. The proper attitude would be to perform to your highest ability so the system will work better for analysts replacing you. It is demoralizing to return to a deployed site months later and find the work environment the same or worse than you left it. Improvements/quality should be an ongoing process.

18.3.3. Your deployment isn't complete until your trip report is accomplished. Keeping a daily logbook will help you reconstruct the events and identify the problems encountered, workarounds applied, solutions achieved, and needed improvements. Don't neglect to accentuate the positive as well as the negative. The difference analysts make in the support they provide will no doubt directly impact our career field.

PAUL A. WEAVER, JR.
Major General, USAF
Director, Air National Guard

OFFICIAL

DEBORAH GILMORE
Chief
Administrative Services

10 Attachments
1. References, Professional Library and File System
2. Glossary of Statistical Terms
3. Data Dictionary
4. Abbreviations and Acronyms
5. Definitions
6. Algorithms for Logistics – Quality Performance Measures
7. Definitions and Metrics
8. Helpful Hints for Data Investigation
9. USAF Formal Schools Extract: Analysis Courses
10. Logistics Analysis Data Request

Attachment 1

REFERENCES, PROFESSIONAL LIBRARY AND FILE SYSTEM

References

ACCI 21-101	*Objective Wing Aircraft Maintenance*
ACCPAM 21-115	*Cams for Mobility (GO81)*
AFCSM 21-556	*Core Automated Maintenance System (CAMS) Computer Operation Manual*
AFI 10-1101	*Operations Security*
AFI 21-103	*Equipment Inventory, Status, and Utilization Reporting*
AFI 99-101	*Developmental Test & Evaluation*
AFMAN 36-2108	*Airman Classification Guide*
AMCPAM 21-102	*Unit Health of the Force Reports and Maintenance Analysis Guide*
ANGI 21-101	*Maintenance Management of Aircraft*
T.O. 00-20-2	*The Maintenance Data Collection System*

Professional Library and File System

A professional library is essential to the success of any office. Don't rely on someone to tell you everything you need to know. Knowledge is power. You must be as self-sufficient as possible in our business. You'll need access to many reference sources but not all have to be located in analysis. Reference materials are a must for thorough analyses. Tailor them to meet your needs and keep them current. References will range from wing instructions all the way to Air Force and DOD materials. Some suggested items for your professional library are:

Publication	**Title**
	Career Development Courses (CDC) 2R051 and 2R071
	Statistical Methods Books (local purchase)
Navy PC Mag.	CHIPS Request for distribution DSN 564-8704
ACCI 21-101	Objective Wing Aircraft Maintenance
ACCI 21-118	Improving Aerospace Equipment Reliability and Maintainability
ACCI 21-165	Aircraft Flying and Maintenance Scheduling Effectiveness
AFCSM 21-556, Vol I	Core Automated Maintenance System (CAMS) Computer Operation Manual
AFCSM 21-556 / 579 (Vol 2)	Core Automated Maintenance System (CAMS)
AFDIR 37-135	Air Force Address Directory
AFI 10-1101	Operations Security
AFI 21-101	Maintenance Management of Aircraft
AFI 21-103	Equipment Inventory, Status, and Utilization Reporting
AFI 21-118	Improving Aerospace Equipment Reliability and Maintainability
AFI 21-129	Two Level Maintenance and Regional Repair of AF Weapon Systems and Equipment
AFI 31-209	The Installation and Resources Protection Program
AFI 33-101	Communications & Information Management Guidance Responsibilities
AFIND-21	Numerical Index of Base Level Standard System SSC Commercial Documentation
AFM 37-123	Management of Records
AFM 37-126	Preparing Official Communications
AFM 171-150	Data Base Administration/QLP
AFPD 21-1	Managing Aerospace Equipment Maintenance
AFPD 21-3	Technical Orders
AFRP 90-1	The Inspector General's Brief (TIG BRIEF)

AFSSI 5100	Automatic Data Processing (ADP) Security Policy, Procedures, and Responsibilities
AMCI 21-101	Maintenance Management Policy
AMCP 21-102	Unit Health of the Force Reports and Maintenance Analysis Guide
AMCP 21-115	Cams for Mobility (GO81)...
ANGI 21-101	Maintenance Management of Aircraft
ANGI 33-103	Internet and Electronic Mail Policy
ANGPD 33-1	Internet and Electronic Mail Policy
T.O. 00-20-1	Preventive Maintenance Program General Policy Requirements and Procedures
T.O. 00-20-2	Maintenance Data Collection
T.O. 00-20-5	Aerospace Vehicle Inspection and Documentation

Attachment 2

GLOSSARY of STATISTICAL TERMS

Abscissa

The horizontal or X axis of the coordinate system. On a frequency distribution, the abscissa typically measures the variable in question (performance measure), whereas the Y axis (ordinate) represents the frequency of occurrence.

Alpha Error (or type 1 error)

The probability of being wrong whenever the null hypothesis is rejected, or the probability of rejecting the null hypothesis when it should have been accepted. By definition, then, the alpha error can only occur when H_0 has been rejected.

Alternate Hypothesis

The opposite of the null hypothesis. The alternate hypothesis states that chance has been ruled out—that there are population differences (when testing the hypothesis of difference), or that a correlation does exist in the population (when testing the hypothesis of association).

Analysis of Variance

Statistical test of significance developed by Sir Ronald Fisher. It is also called the F ratio, or ANOVA, for *AN*alysis *O*f *VA*riance. The test is designed to establish whether or not a significant (non-chance) difference exists among several sample means. Statistically, it is the ratio of the variance occurring between the sample means to the variance occurring within the sample groups. A large F ratio, that is when the variance between is larger than the variance within, usually indicates a non-chance or significant difference.

Beta Coefficient (*b*) or Slope

In a scatter plot, the slope of the regression line indicates how much change in the *Y* variable accompanies a one-unit change in the *X* variable. When the slope is positive (lower left to upper right), *Y* will show an increase as *X* increases, whereas a negative slope (upper left to lower right) indicates a decrease in *Y* is accompanying an increase in *X*. In the regression equation, $Y = bX + a$, the slope is symbolized by the *b* term.

$$b = \frac{rS_y}{S_x}$$

Beta Error (or type 2 error)

The probability of being wrong whenever the null hypothesis is accepted, or the probability of accepting the null hypothesis when it should have been rejected.

Bias

Sampling error, which is not random. Occurs when the difference between $\overline{X}$ and μ is consistently in *one direction*. Bias results when samples *are not* representative of the population.

Central Limits Theorem

The theoretical statement that when sample means are selected randomly from a single population, the means will distribute normally, even if the population distribution deviates from normality. The theorem assumes that sample sizes are relatively large (at least 30) and that they are all selected from *one* population.

Central Tendency (measures of)

A statistical term used for describing the typical, middle, or central scores in a distribution of scores. Measures of central tendency are used when the researcher wants to describe a group as a whole with a view toward characterizing that group on the basis of its most common measurement. The researcher wishes to know what score best represents a group of differing scores. The three measures of central tendency are the mean (or arithmetic average), the median (or the midpoint of the distribution), and the mode (the most frequently occurring score in the distribution).

Chi Square (x^2)

A statistical test of significance used to determine whether or not frequency differences have occurred on the basis of chance. Chi square requires that the data be in nominal form, or the actual number of cases (frequency of occurrence) that fall into two or more discrete categories. It is considered to be a non-parametric test (no population assumptions are required for its use). The basic equation is as follows:

$$\chi^2 = \sum \frac{(f_0 - f_e)^2}{f_e}$$

when f_0 denotes the frequencies actually observed and f_e the frequencies expected on the basis of chance.

Coefficient of Contingency

A test of correlation on nominal data sorted into any number of independent cells.

$$C = \sqrt{\frac{\chi^2}{N + \chi^2}}$$

Coefficient of Determination (r^2)

A method for determining what proportion of the information about *Y* is contained in *X*; found by squaring the Pearson *r*.

Confidence Interval

The range of predicted values within which one can expect with a certain degree of certainty that the true parameter value will fall. Usually, confidence intervals are determined on the basis of a probability value of .95 (95% certainty) or .99 (99% certainty).

Control Group

In experimental research, the control group is the comparison group, or the group that receives zero magnitude of the independent variable. The use of a control group is critical in evaluating the pure effects of the independent variable on the measured responses of the subjects.

Correlated *F* Ratio

Statistical test of the hypothesis of difference among several sample means, where sample selection is correlated. The correlated *F* requires interval data.

Correlated Samples

In experimental research, two or more samples that are not selected independently. The selection of one sample determines how the other sample(s) will be selected, as in a matched-group design.

Correlated *t* Ratio

Statistical test of the hypothesis of difference between two sample means, where the sample selection is correlated. The correlated *t* requires interval data.

$$t = \frac{\overline{X}_1 - \overline{X}_2}{\sqrt{s\frac{2}{x_1} + s\frac{2}{x_2} - 2r_{1,2}s_{\overline{X}_1}s_{\overline{X}_2}}}$$

Correlation Coefficient

A quantitative formulation of the relationship existing among two or more variables. A correlation is said to be positive when high scores on one variable associate with high scores on another variable, and low scores on the first variable associate with low scores on the second. A correlation is said to be negative when high scores on the first variable associate with low scores on the second, and vice versa. Correlation coefficients range in value from +1.00 to -1.00. Correlation coefficients falling near the zero point indicate no consistent relationship among the measured variables. In social research, the correlation coefficient is usually based on taking several response measures of *one group of subjects*.

Cramer's *V*

A test of correlation on nominal data when the number of independent cells is greater than four.

$$= \sqrt{\frac{x^2}{N(k-1)}}$$

Cross-Sectional Research

Type of non-experimental research, sometimes used to obtain data on possible growth trends in a population. The researcher selects a sample (cross section) at one age level, say 20-year-olds, and compares these measurements with those taken on a sample of older subjects, say 65-year-olds. Comparisons of this type are often misleading (today's 20-year-olds may have very different environmental backgrounds, educational experience, for example, than the 65-year-old subjects have).

Deciles

Divisions of a distribution representing tenths, the first decile representing the 10th percentile, and so on. The 5th decile, therefore, equals the 50th percentile, the 2nd quartile, and the median.

Degrees of Freedom (df)

With interval (or ratio) data, degrees of freedom refer to the number of scores free to vary after certain restrictions have been placed on the data. With six scores and a restriction that the sum of these scores must equal a specified value, then five of these scores are free to take on any value whereas the sixth score is fixed (not free to vary). In inferential statistics, the larger the size of the sample, the larger the number of degrees of freedom.

With nominal data, degrees of freedom depend, *not on the size of the sample*, but on the number of categories in which the observations are allocated. Degrees of freedom are here based on the number of frequency values free to vary after the sum of the frequencies from all of the cells has been fixed.

Dependent Variable

In any antecedent-consequent relationship, the consequent variable is called the dependent variable. The dependent variable is a measure of the output side of the input-output relationship. In experimental research, the dependent variable is the effect half of the cause-and-effect relationship, whereas in correlational research the dependent variable is the measure being predicted. In the social sciences, the dependent variable is typically a response measure.

Descriptive Statistics

Techniques for describing and summarizing data in abbreviated, symbolic form; shorthand symbols for describing large amounts of data.

Deviation Score (x)

The difference between a single score and the mean of the distribution. It is found by subtracting the mean, $\overline{X}$, from the score X. The deviation score $(X - \overline{X})$ is symbolized as x. Thus, $x = X - \overline{X}$.

Distribution

The arrangement of measured scores in order of magnitude. Listing scores in distribution form allows the researcher to notice general trends more readily than with an unordered set of raw scores. A *frequency distribution* is a listing of each score achieved, together with the number of individuals receiving that score. When graphing frequency distributions, one usually indicates the scores on the horizontal axis (abscissa) and the frequency of occurrence on the vertical axis (ordinate).

Double-Blind Study

A method used by researchers to eliminate experimental error. In a double-blind study neither the individual conducting the study nor the subjects are aware of which group is the experimental group and which the control. This prevents any unconscious bias on the part of the experimenter, or any contaminating motivational sets on the part of the subjects.

Exclusion Area

The extreme areas under the normal curve. Because of the curve's symmetry, two z scores that are equidistant from the mean exclude the extreme areas at both the top and bottom of the curve.

Experimental Design

Techniques used in experimental research for creating equivalent groups of subjects. There are three basic experimental designs:

(1) after-only—when subjects are randomly assigned to control and experimental groups and the dependent variable is measured only after the introduction of the independent variable

(2) before-after—where a group of subjects is used as its own control, and the dependent variable is measured both before and after the introduction of the independent variable

(3) matched-group—when subjects are matched or equated, person for person, on some relevant variable.

Experimental Research

Research conducted using the experimental method, where an independent variable is manipulated (stimulus) in order to bring about a change in the dependent variable (response). Using this method the researcher is allowed to make cause-and-effect inferences. Experimental research requires careful controls in order to establish the pure effects of the independent variable. Equivalent groups of subjects are formed, then exposed to different stimulus conditions, and then measured to see if differences can be observed.

Factorial ANOVA

As opposed to a one-way ANOVA, the factorial ANOVA allows for the analysis of data when more than one independent variable is involved. Results can be analyzed on the basis of the effects of each independent variable or on the basis of the possible interaction among the independent variables. Data to be analyzed should be in at least interval form.

Fisher, Sir Ronald (1890-1962)

English mathematician and statistician who developed the analysis of variance technique, or *F* (for Fisher) ratio.

Frequency Polygon

A graphic display of data where single points are plotted above the measures of performance. The height where the point is placed indicates the frequency of occurrence. The points are connected by a series of straight lines.

Friedman ANOVA by Ranks (χ_r^2)

A test of the hypothesis of difference on ordinal data when the sample groups have either been matched or a single sample has been measured repeatedly. The Friedman ANOVA is the ordinal counterpart of the correlated F.

$$x_r^2 = \frac{12}{Nk(k+1)}(\sum R_1^2 + \sum R_2^2 + \sum R_3^2 \cdots) - 3N(k+1)$$

Galton, Sir Francis (1822-1911)

The "father of intelligence testing" and the creator of the concept of individual differences, Galton also introduced the concepts of regression and correlation (although it was left to his friend and colleague Karl Pearson to work out the mathematical equations).

Gambler's Fallacy

An erroneous assumption that independent events are somehow related. If a coin is flipped ten times and comes up heads each of those times, the gambler's fallacy predicts that it is virtually certain for the coin to come up tails on the next flip. Since each coin flip is independent of the preceding one, the probability remains the same (.50) for each and every coin flip, regardless of what has happened in the past. The gambler remembers the past, but the coin does not.

Gauss, Karl Friedrich (1777-1855)

German mathematician credited with having originated the normal curve. For this reason the normal curve is often called the Gaussian curve.

Gossett, William Sealy (1876-1937)

Using the pen name "student," Gossett, while working for the Guinness Brewing Company in Ireland, developed the technique of using sample data to predict population parameters, which led to the development of the *t* test.

Halo Effect

A research error arising from the fact that people who are viewed positively on one trait are often also thought to have many other positive traits. Advertisers depend on this effect when they use famous personalities to endorse various products—anyone who can throw touchdown passes must be an expert in evaluating razor blades. Researchers must guard against the halo effect, as it will contaminate the independent variable.

Hawthorne Effect

A major research error due to response differences resulting not from the action of the independent variable, but from the flattery or attention paid to the subjects by the experimenter. Typically, the potential for this error is inherent in any study using the before-after experimental design without an adequate control group. Any research, for example, when subjects are measured, then subjected to some form of training, then measured again, should be viewed with suspicion unless an appropriate control group is used—that is, an equivalent group that is measured, *then not subjected to the training*, and then measured again. Only then can the researcher be reasonably confidant that the response differences are due to the pure effects of the independent variable.

Histogram (bar graph)

A graphic representation of data in which a series of rectangles (bars) are drawn above the measure of performance. The height of each bar indicates the frequency of occurrence.

Homogeneity of Variance

An assumption of both the t and F ratios, which demands that the variability within each of the sample groups being compared should be fairly similar.

Homoscedasticity

The fact that the standard deviations of the Y scores along the regression line should be fairly equal. Otherwise the standard error of estimate is not a valid index of accuracy.

Inclusion Area

The middle most area of the normal curve, included between two z scores equidistant from the mean. Because of the symmetry of normal curve, the middle most area includes, in equal proportions, the area immediately to the left of the mean and the area immediately to the right of the mean.

Independent Variable

In any antecedent-consequent relationship, the antecedent variable is called the independent variable. Independent variables may be manipulated or assigned. A manipulated independent variable occurs when the researcher deliberately alters the environmental conditions to which subjects are being subjected. An assigned independent variable occurs when the researcher categorizes subjects on the basis of some preexisting trait.

Whether the independent variable is manipulated or assigned, determines whether the research is experimental (manipulated independent variable). In experimental research, the independent variable is the causal half of the cause-and-effect relationship. In correlational research, the independent variable is the measure from which the prediction will be made.

Inductive Fallacy

An error in logic resulting from over generalizing on the basis of two few observations. The inductive fallacy occurs when one assumes that all members of a class have a certain characteristic because one member of that class has it. It would be fallacious to assume that all Mongolians are liars on the basis of having met one Mongolian who was a liar.

Inferential (predictive) Statistics

Techniques for using the measurements taken on samples to predict the characteristics of the population—the use of descriptive statistics for inferring parameters.

Interdecile Range

The scores that include the middle most 80% of a distribution, or the difference between the first and ninth deciles.

Interquartile Range

Those scores that include the middle most 50% of a distribution, or the difference between the 1st and 3rd quartiles.

Interval Data

Data (measurements) in which values are assigned such that both the order of the numbers and the *intervals* between numbers are known. Thus, interval data not only provide information regarding greater-than or less-than status, but also information as to how much greater or less than.

Kruskal-Wallis *H* Test

A test of the hypothesis of difference on ordinal data among at least three independently selected random samples. The *H* test is the ordinal counterpart of the one-way ANOVA.

$$H = \frac{12}{N(N+1)}\left(\frac{\sum R_1^2}{n_1} + \frac{\sum R_2^2}{n_1} + \frac{\sum R_3^2}{n_1} \cdots\right) - 3(N+1)$$

Kurtosis (ku)

The state or degree of the curvature of a unimodal frequency distribution. Kurtosis refers to the *peakedness* or flatness of the curve.

Leptokurtic Distribution

A unimodal frequency distribution in which the curve is relatively peaked—most of the scores occur in the middle of the distribution—with very few scores occurring in the tails. A *leptokurtic* distribution yields a relatively small standard deviation.

Longitudinal Research

A type of post-facto research in which subjects are measured repeatedly throughout their lives in order to obtain data on possible trends in growth and development. Terman's* massive study of growth trends among intellectually gifted children is an example of this research technique. The study, begun in the early 1920s, is still in progress today and is still providing science with new data. Longitudinal research requires great patience on the part of the investigator, but the obtained data is considered to be more valid than that obtained using the cross-sectional approach.

* L.M. Terman, *Genetic Studies of Genius* (Stanford, California: Stanford University Press, 1925, 1926, 1930, 1947, 1959).

Mann-Whitney *U* Test

A test on ordinal data of the hypothesis of the difference between two independently selected random samples. The *U* test is the ordinal counterpart of the independent *t* test.

$$z_U = \frac{U - \frac{(n_1)(n_2)}{2}}{\sqrt{\frac{n_1 n_2 (n_1 + n_2 + 1)}{12}}}$$

McNemar Test

Technique developed by the statistician Quinn McNemar that uses chi square for the analysis of nominal data from correlated samples.

$$x^2 = \frac{|a-d|^2}{a+d}$$

Mean ($\overline{X}$)

A measure of central tendency specifying the arithmetic average. Scores are added and then divided by the number of cases.

$$\overline{X} = \frac{\Sigma X}{N}$$

The mean is best used when the distribution of scores is balanced and unimodal. In a normal distribution, the mean coincides with the median and the mode. When the entire population of scores is used, the mean is designated by the Greek letter μ (mu).

Measurement

A method of quantifying observations by assigning numbers to them on the basis of specific rules. The rules chosen determine which scale of measurement is being used: nominal, ordinal, interval, or ratio.

Median (Mdn)

A measure of central tendency that specifies the middle most score in an ordered set of scores. The median always represents the 50th percentile. It is the most valid measure of central tendency whenever the distribution is skewed.

Mesokurtic

A unimodal frequency distribution whose curve is normal. (See Normal Curve).

Mode (Mo)

A measure of central tendency that specifies the most frequently occurring score in a distribution of scores. When there are two most-common points, the distribution is said to be bimodal.

Multiple *R*

A single numerical value that quantifies the correlation among three or more variables. The equation for a three-variable multiple *R* is as follows:

$$R_{y \cdot 1,2} = \frac{\sqrt{r_{y,1}^2 + r_{y,2}^2 - 2r_{y,1}r_{y,2}r_{1,2}}}{1 - r_{1,2}^2}$$

Multiple Regression

Technique using the multiple *R* for making predictions of one variable given measures on two or more others. It requires the calculation of the intercept (a) and also at least two slopes (b_1 and b_2). For the three-variable situation, the multiple regression equation is as follows:

$$Y_{Mpred} = b_1 X_1 + b_2 X_2 + a$$

Nominal Data

Data (measurements) in which numbers are used to label discrete, mutually exclusive categories; nose counting data, which focuses on the frequency of occurrence within independent categories.

Nonparametrics

Statistical tests that neither predict the population parameter, μ, or make any assumptions regarding the normality of the underlying population distribution. These tests may be run on ordinal or nominal data, and typically have less power than do the parametric tests.

Normal Curve

A frequency distribution curve resulting when scores are plotted on the horizontal axis (X) and frequency of occurrence is plotted on the vertical axis (Y). The normal curve is a theoretical curve shaped like a bell and fulfilling the following conditions:

(1) most of the scores cluster around the center, and as we move away from the center in either direction there are fewer and fewer scores

(2) the scores fall into a symmetrical shape—each half of the curve is a mirror image of the other

(3) the mean, median, and mode all fall at precisely the same point, the center; and

(4) there are constant area characteristics regarding the standard deviation.

Null Hypothesis

The assumption that the results are simply due to chance. When testing the hypothesis of difference, the null hypothesis states that no real differences exist in the population from which the samples are drawn. When testing the hypothesis of association, the null hypothesis states that the correlation in the population is equal to zero (does not exist).

Odds

The chances *against* a specific event occurring. When the odds are 5 to 1, for example, it means that the event will *not* occur five times for each single time that it will occur.

Ordinal Data

Rank-ordered data, that is, derived only from the order of the numbers, not the differences between them. Ordinal measures provide information regarding greater-than or less-than status, but *not* how much greater or less.

Ordinate

The vertical or Y axis in the coordinate system. On a frequency distribution, the ordinate indicates the frequency of occurrence.

Parameter

Any measure obtained by having measured the entire population. Parameters are, therefore, unusually inferred rather than directly measured.

Partial Correlation

Correlation technique that allows for the ruling out of the possible effects of one or more variables on the relationship among the remaining variables. In the three-variable situation, the partial correlation rules out the influence of the third variable on the correlation between the remaining two variables. The equation for separating out out the influence of the third variable is as follows:

$$r_{y,1\cdot 2} = \frac{r_{y,1} - r_{y,2} r_{1,2}}{\sqrt{(1 - r_{y,2}^2)(1 - r_{1,2}^2)}}$$

Pascal, Blaise (1623-1662)

French mathematician and philosopher who introduced the concepts of probability and random events.

Pearson, Karl (1857-1936)

English mathematician and colleague of Sir Francis Galton. It was Pearson who translated Galton's ideas on correlation into precise mathematical terms, creating the equation for the product-moment correlation coefficient, or the Pearson *r*.

Pearson *r*

Statistical technique introduced by Karl Pearson for showing the degree of relationship between two variables. Also called the product-moment correlation coefficient, it is used to test the hypothesis of association, that is, whether or not there is a relationship between two sets of measurements. The Pearson *r* can be calculated as follows:

$$r = \frac{\frac{\sum XY}{N} - (\overline{X})(\overline{Y})}{S_x S_y}$$

Computed correlation values range from +1.00 (perfect positive correlation) through zero to -1.00 (perfect negative correlation). The farther the Pearson r is from zero, whether in a positive or negative direction, the stronger is the relationship between the two variables. The Pearson r can be used for making better-than-chance predictions, but can not be used for isolating causal factors.

Percentiles (or centiles)

The percentage of cases falling below a given score. Thus, if an individual scores at the 95th percentile, that individual has exceeded 95 percent of all persons taking that particular test. If test scores are normally distributed, and if the standard deviation of the distribution is known, percentile scores can easily be converted to the resulting *z* scores.

Percentile Rank

The value that indicates a given percentile. A point at the 75th percentile is said to have a percentile rank of 75.

Phi Coefficient

A test of correlation on nominal data when the number of independent cells is exactly 4 (that is, a 2 X 2 chi square analysis).

$$\phi = \sqrt{\frac{x^2}{N}}$$

Platykurtic Distribution

A unimodal frequency distribution in which the curve is relatively flat. Large numbers of scores appear in both tails of the distribution. A platykurtic distribution of scores yields a relatively large standard deviation.

Point of Intercept (a)

In a scatter plot, the point of intercept is the location where the regression line crosses the ordinate, or the value of Y when X is equal to zero. In the regression equation, $Y = bX + a$, the intercept is symbolized by the a term.

Population

The entire number of persons, things, or events (observations) having at *least* one trait in common. Populations may be limited (finite) or unlimited (infinite).

Post-Facto Research

A type of research that, while not allowing for cause-and-effect conclusions, does allow the researcher to make better-than-chance predictions. In such research, subjects are measured on one response dimension and these measurements are compared with different response measures. Responses are compared with responses, as in comparing the SAT scores with grade-point averages for a group of students. Since the experimenter does not treat the subjects differently (there is no manipulation of an independent variable), cause-and-effect conclusions may not be drawn from post-facto data.

Power ($1 - \beta$)

A measure of the sensitivity of a statistical test. The more powerful a test is, the less is the likelihood of committing the beta error (accepting the null hypothesis when it should have been rejected). The higher a test's power, the higher is the probability of a small difference or a small correlation being found to be significant.

Probability (P)

The statement as to the number of times a specific event, s, can occur out of the total possible number of events, t.

$$P = \frac{s}{t}$$

Probability should be expressed in decimal form. Thus, a probability of 1/20 is written as .05.

Quartiles

Divisions of a distribution representing quarters; the 1st quartile representing the 25th percentile, the 2nd quartile the 50th percentile (or median), and the 3rd quartile the 75th percentile.

Quota Sampling

Selecting a sample that directly reflects the population characteristics. If it is known that 45% of the population is composed of males, and if it is assumed that gender is a relevant research variable, then the sample must contain 45% of male subjects.

Random Sample

Sample selected in such a way that every element or individual in the entire population has an equal chance of being chosen. When samples are selected randomly, then sampling error should also be random and the samples representative of the population.

Range (*R*)

A measure of variability that describes the entire width of the distribution. The range is the difference between the two most extreme scores in a distribution, and is, thus, equal to the highest value minus the lowest value.

Ratio Data

Data (measurements) that provide information regarding the order of numbers, the difference between numbers, and also an *absolute* zero point. It permits comparisons, such as A being three times B, or one-half of B.

Regression line

The single straight line that lies closest to all of the points in a scatter plot. The regression line can be used for making correlational predictions when three important pieces of information are known:

(1) how much the scatter points deviate from the line

(2) the slope of the line

(3) the point of intercept

$$Y = bX + a$$

Representative Sample

A sample that reflects the characteristics of the entire population. Random sampling is assumed to result in representative samples.

Sample

A group of any number of observations selected from a population, as long as it is less than the total population.

Sampling Distributions

Distributions made up of measures taken on successive random samples. Such measures are called statistics, and when all samples in an entire population are measured, the resulting sampling distributions are expected to be normal. (See Central Limits Theorem.) Two important sampling distributions are the distribution of means and the distribution of differences.

Sampling Error

The expected difference between the mean of the sample and the mean of the population ($\overline{X} - \mu$). Under conditions of random sampling, the probability of obtaining a sample mean greater than the population mean is identical to the probability of obtaining a sample mean less than the population mean ($P = .50$).

Scatter Plot

A graphic format in which each point represents a pair of scores, the score on X as well as the score on Y. The array of points in a scatter plot typically forms an elliptical shape (a result of the central tendency usually present in both the X and Y distributions).

Secular Trend Analysis

A method using the regression technique to predict trends across *time*. Historical data are used for predicting future results, based on the assumption that the past trend will continue.

Significance

A statistical term used to indicate that the results of a study are not simply a matter of chance. Researchers talk about significant differences and significant correlations, the assumption being that chance has been ruled out (on a probability basis) as the explanation of these phenomena.

Skewed Distribution

An unbalanced distribution in which there are a few extreme scores in *one direction*. In a skewed distribution, the best measure of central tendency is the median.

Spearman, Charles E. (1863-1945)

English psychologist and test expert who worked in the area of measuring intelligence and identifying the factors that make up intelligence. In pursuing his correlational studies on intellectual factors, he produced a correlation technique for the analysis of ordinal data called the Spearman rho, or the r_S.

The Spearman r_s

Correlation coefficient devised by Charles E. Spearman for use with rank-ordered (ordinal) data. Sometimes called the Spearman r_S (rho), the coefficient is found as follows:

$$r_s = 1 - \frac{6\Sigma d^2}{N(N^2-1)}$$

Standard Deviation (S)

A measure of variability that indicates how far *all* scores in a distribution vary from the mean. The standard deviation has a constant relationship with the area under the normal curve (see Normal Curve).

The sample standard deviation is calculated with the following equation:

$$S = \sqrt{\frac{\Sigma X^2}{N} - \overline{X}^2}$$

The estimated standard deviation of the population is calculated with the following equation:

$$s = \sqrt{\frac{\Sigma X^2 - \frac{(\Sigma X)^2}{N}}{N-1}}$$

When the standard deviation is calculated on the basis of all scores in the entire population, it is designated as Σ (Greek letter sigma).

Standard Error of Difference ($s_{\overline{X}_1-\overline{X}_2}$)

An *estimate* of the standard deviation of the entire distribution of *differences* between pairs of, successively and randomly selected samples means. This estimate can be made on the basis of the information contained in just two samples.

$$s_{\overline{X}_1-\overline{X}_2} = \sqrt{s^2_{\overline{X}_1} + s^2_{\overline{X}_2} - 2r_{1,2}s_{\overline{X}_1}s_{\overline{X}_2}}$$

When sample selections are independent of each other, the correlation term ($2r_{1,2}s_{\overline{X}_1}s_{\overline{X}_2}$) is equal to zero and is, therefore, not used. The equation for the standard error of difference for independent samples is, thus, as follows:

$$s_{\overline{X}_1-\overline{X}_2} = \sqrt{s^2_{\overline{X}_1} + s^2_{\overline{X}_2}}$$

Standard Error of Estimate (SE_{est})

A technique for establishing the accuracy of a predicted *Y* value obtained by using the regression equation. The higher the correlation between *X* and *Y*, the lower is the resulting value of the standard error of estimate and the more accurate is the predicted *Y* value. When $r = 0$, the standard error of estimate is equal to the standard deviation of the *Y* distribution.

Standard Error of the Mean ($s_{\overline{X}}$)

An *estimate* of the standard deviation of the entire distribution of random sample means successively selected from a single population until that population has been exhausted. This estimate can be made on the basis of information contained in a *single* sample, that is, the standard deviation of the sample and the size of the sample.

$$s_{\overline{X}} = \frac{S}{\sqrt{N-1}}$$

Standard Error of Multiple Estimate

A technique for assessing the accuracy of a prediction that has been generated from the multiple regression equation. For the three-variable situation, the standard error of multiple estimate is as follows:

$$SE_{Mest} = S_y \sqrt{1 - R^2_{y \cdot 1,2}}$$

Statistic

Any measure that is obtained from a sample as opposed to the entire population. The range (or the standard deviation or the mean) of a set of sample scores is a statistic.

Sum of Squares (SS)

An important concept for ANOVA; the sum of squares equals the sum of the squared deviations of all scores around the mean.

$$SS = \sum x^2 = \sum X^2 - \frac{(\sum X)^2}{N}$$

When the sum of squares is divided by its appropriate degrees of freedom, the resulting value is called the mean square, or variance.

***t* Ratio**

Statistical test used to establish whether or not a significant (non-chance) difference exists between two sample means. It is the ratio of the difference between two sample means to an estimate of the standard deviation of the distribution of differences.

$$t = \frac{\overline{X}_1 - \overline{X}_2}{s_{\overline{X}_1 - \overline{X}_2}}$$

***T* Score**

A converted standard score such that the mean equals 50 and the standard deviation equals 10. *T* scores, thus, range from a low of 20 to a high of 80.

Tukey's HSD (honestly significant difference)

A technique developed by J. W. Tukey or establishing whether or not the differences among various sample means are significant. The test is performed after an ANOVA only when the *F* ratio is significant.

Unimodal Distribution

A distribution of scores in which only one mode (most frequently occurring score) is present.

Variability Measures

Measures that give information regarding individual differences, or how persons or events vary in their measured scores. The three most important measures of variability are the range, the standard deviation, and the variance (which is the standard deviation squared).

Variable

Anything that varies *and can be measured.* In experimental research, the two most important variables to be identified are the independent variable and the dependent variable. The independent variable is a stimulus, is actively manipulated by the experimenter, and is the causal half of the cause-and-effect relationship. The dependent variable is a measure of the subject's response and is the effect half of the cause-and-effect relationship.

Variance

A measure of variability that indicates how far all of the scores in a distribution vary from the *mean.* Variance is equal to the square of the standard deviation.

Wilcoxon *T* Test

A test on ordinal data of the hypothesis of difference between two sample groups when the selections are correlated (as in the matched-group design). The Wilcoxon *T* is the ordinal counterpart o the correlated t.

Yates Correction

A correction factor applied to a 2 X 2 chi square analysis (or anytime $df = 1$) whenever any of the expected frequencies are less than 10. The difference between f_o and f_e is reduced by .50 resulting in a slightly lower chi square value.

***z* Score (standard score)**

A number that is the result of the translation of a raw score into units of standard deviation. The *z* score specifies how far above or below the mean a given score is in the standard deviation units. Any score above the mean converts to a positive *z* score, while scores below the mean convert to negative *z* scores. The *z* score is also referred to as a standard score. The mean of the *z* score distribution is equal to zero.

$$z = \frac{X - \overline{X}}{S}$$

Attachment 3

DATA DICTIONARY

GLOSSARY OF TERMS AND ABBREVIATIONS

Section A—Terms

Definition of Common Terms. The following terms are used in the L-QPM program:

Air Abort Rate. The number of air aborts divided by sorties flown.

Aircraft Status. *NOTE:* acft statuses are determined by the MDS MESL.

Mission Capable (MC). Full mission capable + partial mission capable (FMC + PMC).

Full Mission Capable (FMC). As provided by CAMS/REMIS per MDS
The aircraft is capable of doing all of its assigned missions.

Partial Mission Capable Both (PMCB). Maintenance and supply, as provided by CAMS/REMIS per MDS. The aircraft can do at least one, but not all of its assigned missions because of maintenance and supply.

Partial Mission Capable Maint (PMCM). Maintenance only ,as provided by CAMS/REMIS per MDS. The aircraft can do at least one, but not all of its assigned missions because of maintenance required on an inoperable system.

Partial Mission Capable Supply (PMCS). Supply only, as provided by CAMS/REMIS per MDS. The aircraft can do at least one, but not all of it's assigned missions because of a supply shortage

Total Partial Mission Capable Maint (TPMCM). PMCM and PMCB, (combined) as provided by CAMS/REMIS per MDS.

Total Partial Mission Capable Supply (TPMCS). PMCS and PMCB, (combined) as provided by CAMS/REMIS per MDS.

Flyable NMCB Unsch (NMCB-U). Unscheduled maintenance and supply, as provided by CAMS/REMIS per MDS. The acft cannot do any of its assigned missions but is not restricted from flying.

Flyab le NMCB Sched (NMCB-S). Scheduled maintenance and supply, as provided by CAMS/REMIS per MDS. The acft cannot do any of its assigned missions but is not restricted from flying.

Flyable NMCM Unsch (NMCM-U). Unscheduled maintenance, as provided by CAMS/REMIS per MDS. The acft cannot do any of its assigned missions but is not restricted from flying

Flyable NMCM Sched (NMCM-S). Scheduled maintenance, as provided by CAMS/REMIS per MDS. The acft cannot do any of its assigned missions but is not restricted from flying.

Flyable NMCS. As provided by CAMS/REMIS per MDS. The acft cannot do any of its assigned missions due to a supply shortage, but is not restricted from flying.

NMCB Unsch. Unscheduled maintenance and supply, as provided by CAMS/REMIS per MDS. The acft cannot do any of its assigned missions because of supply and unscheduled in-work maintenance.

NMCB Sched. Scheduled maintenance and supply, as provided by CAMS/REMIS per MDS. The acft cannot do any of its assigned missions because of supply and scheduled in-work maintenance.

NMCM Unsch. Unscheduled maintenance, as provided by CAMS/REMIS per MDS. The acft cannot do any of its assigned missions because of unscheduled in-work maintenance.

NMCM Sched. Scheduled maintenance, as provided by CAMS/REMIS per MDS. The acft cannot do any of its assigned missions because of scheduled in-work maintenance.

NMCS. Not mission capable supply, as provided by CAMS/REMIS per MDS. The acft cannot fly or do any of its assigned missions due to a supply shortage.

TNMCM. All NMCB + all NMCM. (inc flyable sched & unsch)

TNMCS. All NMCB + all NMCS. (inc flyable sched & unsch)

Attrition. Specified/categorized losses in a given time period.

Average Fleet Time. The average fleet time is equal to the average fleet hours/days remaining to the next phase/isochronal inspection divided by the specified inspection interval, as of 2400 hrs on the last day of the month. TDI (TRIC)

Average Hangar Queens. An average computed by dividing the total Hangar Queen days accrued in the reporting period by the inclusive number of days in reporting period, e.g. , 20 Hangar Queen days divided by 30 days in reporting period equals .67 average Hangar Queens.

Average Sortie Duration. (ASD) Flying hours divided by sorties.

Awaiting Maintenance (AWM) Rate. The total number of acft in AWM status, divided by possessed aircraft X 100.

Awaiting Parts (AWP) Rate. The total number of aircraft in AWP status, divided by possessed aircraft X 100.

Backup Aircraft Inventory (BAI). Acft above the primary mission inventory to permit scheduled and unscheduled maintenance, modifications, inspections and repair without reduction of acft available for operational missions.

Break Rate. This is the percentage of acft that land with an overall acft landing status of Code 3 divided by the total sorties flown X100.

Cannibalization Man-hours. Using data from CAMS/GO81, (QMS) determine the total monthly man-hours expended for the month. Action taken "T" & "U" used to calculate the total man-hours expended.

Cannibalization Rate. This rate includes any aircraft-to-aircraft or engine-to-aircraft cannibalization actions. The rate represents the amount of cannibalizations per 100 sorties flown. (i.e. 219 sorties = 2.19 hundred sorties).

Chargeable Aircraft (CHRG). The number of aircraft against which units should build their flying programs. The two most common situations are units in conversion and aircraft short due to PDM/Depot/Modification requirements. Chargeable aircraft will be calculated for applicable units, by month.

Commitment Rate. The percent of aircraft that are scheduled/designated for headquarters (DOD, HAF, MAJCOM, NAF) tasked missions, spares, alerts, local missions, ground trainers, and static displays.

Cumulative (CUM). The fiscal year cumulative performance of an indicator.

Cumulative Actual (CUM ACT). The cumulative actual UTE rate as computed from monthly sorties or hours reported by the unit.

Cumulative Program (CUM PROG). The cumulative programmed UTE rate as developed from the unit's monthly flying program. ***NOTE:*** for most units in September, the year goal = CUM PROG = CUM ACT.

Delayed/Deferred Discrepancy. Malfunctions or discrepancies not creating NMC or PMC status but are not worked within 48 hours and are usually transferred from the 781A to the 781K. Time changes and TCTOs are not counted until the scheduled day of completion is past and action is not completed.

Deviations:

Additions. Any sortie/Home Station Launch (for the heavies) flown that was not on the published weekly schedule. (See deviation reporting procedures below.) FCFs are not considered ADDS, and are "flown as scheduled." ***NOTE:*** Addition of multiple sorties (i.e.: FOL) if canceled will be counted as multiple sorties canceled.

Cancellations. Any sortie that was scheduled in the weekly flying schedule that did not take off within 2 hours of its published time. ***NOTE:*** scheduling of multiple sorties (i.e.: FOL) if canceled will be counted as multiple sorties canceled.

Deletions. Removal of a scheduled launch/sortie for any reason. ***NOTE:*** scheduling of multiple sorties (ie: FOL) if deleted will be counted as multiple sorties canceled.

Deviation. Changes from the printed weekly flying schedule identified as either an Addition/Deletion, or Early/Late takeoff.

(1) Chargeable. Deviations that the unit has control over. (personnel, pilots, maint, parts, scheduling, etc.)

(2) Non-Chargeable. Deviations that are not within the unit's control. (weather, FAA, tower/traffic delays, clearance, HHQ, etc.)

Early/Late Takeoffs. Any sortie on the weekly flying schedule that takes off 0.3 hours before or 0.3 hours after its scheduled takeoff time.

Multiple Deviations. An Acft ADD may cause multiple deviations (CANC or LATE TAKEOFF, etc.) these deviations may either be chargeable or non-chargeable.

Higher Headquarters. Deviations resulting from higher headquarters asking, or changing tasking, which are received too late for inclusion into the flying schedule.

Sympathy. When multiple acft under the command of a flight leader/instructor pilot is canceled or is late in taking off due to the cancellation or delay of one or more of the acft in the flight. Only the cause acft will be counted as chargeable, with the remainder of the flight being recorded as sympathy (non-chargeable). Record these non-chargeable deviations as other.

Weather. Launches that are early/late or cancelled/added due to weather conditions at home station or destination.

Fix Rate. This is the percent of all broken aircraft (landing status code 3) that are returned to flyable status within a specified time period (i.e., 4, 8, or 12 duty hours).

4-Hr Fix Rate. The cumulative percentage of aircraft breaks recovered within 4 duty hours of landing. For fighters, an aircraft break and a 4-hour fix interval is equivalent to a surge sortie opportunity lost in wartime.

8-Hr Fix Rate. The cumulative percentage of aircraft breaks recovered within 8 duty hours of landing. This interval is used for fighter aircraft.

12-Hr Fix Rate The cumulative percentage of aircraft breaks recovered within 12 duty hours of landing. This interval is reported other than fighter aircraft.

Flying Hours Allocated. Determined by ANGRC/XOOH for specific unit (Ops) requirements.

Flying Scheduling Effectiveness Rate. Rate used to determine how efficiently the flying schedule was executed. Indicates unit turmoil caused by flying schedule deviations.

Ground Abort Rate. The number of ground aborts divided by sorties flown plus number of ground aborts X 100.

Hangar Queen. An aircraft that has not flown for at least 30 consecutive days.

Hourly UTE Rate. The average hours flown per possessed aircraft per month.

Hours Possessed. The total number of hours of possessed aircraft. (CAMS Screen #459)

Issue Effectiveness Rate. The percentage of requirements immediately satisfied by Base Supply, used to measure how well customers are supported. It is used as a macro index for effectiveness from all supply sources.

Logistics. This term, when used in reference to aircraft maintenance, will consider anything concerning both maintenance and supply.

Mission Design Series (MDS). Designation of PAI or POAI aircraft. (i.e. F-016A)

Monthly Flying Hour/Sorties Scheduled. The combined weekly schedules as refined at the daily planning/scheduling meeting and accepted by Ops/Maint (including FOL sorties scheduled).

Monthly Flying Hours/Sorties Flown. By MDS as directed and obtained through CAMS/REMIS and verified with Ops.

Monthly Scheduling Effectiveness. Maint Control (or similar agency) will provide analysis with the completed daily/weekly Operations & Maintenance Scheduling Document. Data from CAMS/REMIS will be used to attain scheduling effectiveness. Schedule effectiveness should be measured against the "First Sortie".

$$\text{Sched Eff} = \frac{(\text{Total 1st Sorties Sched} + \text{Chargeable Adds}) - \text{Chargeable Canc.}}{\text{Total Sorties Sched} + \text{Chargeable Adds}} \times 100$$

Mean Time Between Maintenance (MTBM), AKA Mean Time Between Failure (MTBF). A measure of how well a particular item/system performs or can be expected to perform. Analysis of past data can be an indication of how well an item/system can be expected to perform. Items/systems can be tracked by moving averages to show possible trends in performance. A negative (lessening) MTBM would indicate a poorer item/system reliability.

Primary Aircraft Inventory (PAI). Aircraft assigned to meet primary aircraft authorization (includes pdai, pmai, posi, and ptai).

Primary Mission Aircraft Inventory (PMAI). Aircraft assigned to a unit for performance of its wartime mission.

Primary Training Aircraft Inventory (PTAI). Aircraft required primarily for technical and specialized training of crew personnel or leading to aircrew qualification.

Primary Development/Test Aircraft Inventory (PDAI). Aircraft assigned primarily for the test of the aircraft or its components for purposes of research, development, test and evaluation, operational test and evaluation, or support from testing programs.

Primary Other Aircraft Inventory (POAI). Aircraft required for special missions not elsewhere classified.

Quarterly Flying Hours Flown. A total of the individual months flying in the quarter.

Reconstitution Reserve. Aircraft stored or on the ramp which are planned for return to the operating forces in the event of mobilization, replacement, or reconstitution.

Recur Rate. A recurring discrepancy on an aircraft occurs on the second through fourth sortie or attempted sortie after corrective action has been taken and the system or subsystem is used and indicates the same malfunction.

Repair Cycle Processing Time. The average time in days for an unserviceable asset to be repaired on base or sent NRTS to another repair agency. It starts when the replacement part is issued by the flight line parts store (or Base Supply) and ends when the asset is returned serviceable to the part store's shelf or is sent NRTS to another repair agency.

Repeat Rate. A repeat write-up is one which occurs on the next sortie or attempted sortie after corrective action has been taken and the system or subsystem is used and indicates the same malfunction.

Sortie. The takeoff and subsequent full stop landing of a single aircraft as pre-briefed.

Sortie UTE. The average sorties flown per possessed aircraft per month.

Spare Engine Rate. The average number of serviceable spare engines by TMSM for the unit. This data is the average of at least 4 weekly snapshots provided to HHQ by the SRAN Engine Managers. This rate is computed against the fleet WRE for each TMSM.

Stock Record Account Number (SRAN). The "FJ" account at each base that engines are assigned to.

Time Distribution Of Time (Next Inspection). A display of aircraft inspections by tail number showing the amount of time remaining to next inspection. Request for information is via CAMS Screen 400.

Percent of Assigned Aircraft Within 30 Percent of No Remaining Time. Provide the percent of assigned aircraft within 30 percent of running out of inspection time. For example: A-10 Minor/Major Phase cycle is 400 Hours. 30 percent of 400 hours is 120 hours. Therefore, it is expected that 30 percent of assigned aircraft will fall within 120 hours of total phase time. (See Attachment 3, List of Inspection Times by MDS)

Total Abort Rate. Air Abort Rate plus the Ground Abort Rate.

Total Active Inventory (TAI). Aircraft assigned to operating forces for mission, training, test, or maintenance functions (includes primary aircraft inventory, backup aircraft inventory, attrition, and reconstitution reserve)

Total Not Mission Capable Maintenance (TNMCM) Rate. The percent of time that an aircraft is not mission capable due to maintenance (NMCM), plus not mission capable for both maintenance and supply (NMCB).

Total Not Mission Capable Supply (TNMCS) Rate. The percent of time that an aircraft is not mission capable due to supply (NMCS), plus all categories of not mission capable for both maintenance and supply (NMCB).

Type, Model, Series, and Modification (TMSM). The standard nomenclature for engines according to MIL-STD-879.

UTE Rates. The average number of sorties or hours flown per aircraft per month. (See Algorithms)

War Reserve/Readiness Engines (WRE). The quantity of serviceable engines required to support an operational units increased activity and/or problems caused by delay in maintenance deployment, extension of transportation pipelines, or operational peculiarities during war.

Attachment 4

GLOSSARY OF ABBREVIATIONS AND ACRONYMS

Abbreviations and Acronyms

AA, A/A	Air abort
ACMS	Advanced Configuration Management System
ACM	Aircraft Configuration Management
ACTS	Automated Component Tracking System
ACT UTE	Actual Utilization
AD	Addition (deviation)
ADPE	Automated Data Processing Equipment
ADS	Automated Data Systems
AGE	Aerospace Ground Equipment
AGM	Air Surface Attack Guided Missile
AGS	Aircraft Generation Squadron
AID	Accident, Incident and Deficiencies
AIM	Air Intercept Missiles
ALCS	Airborne Launch Control System
AMSA	Automated Maintenance Systems Analysis
ANGRC	Air National Guard Readiness Center
APG	Airplane General
APH	Aircraft Possessed Hours
ASD	Average Sortie Duration
ASIP	Aircraft Structural Integrity program
ASM	Automated Scheduling Module
AT	Air Traffic Control (deviation)
ATS	Automated Training Subsystem
AUR	Accomplishment Utilization Report
AVDO	Aerospace Vehicle Distribution Office
AVG	Average
AVS	Aerospace Vehicle Status Report
AVTR	Airborne Videotape Recorder
AWM	Awaiting Maintenance
AWP	Awaiting Parts
BAI	Backup Aircraft Inventory
BITE	Built-in Test Equipment
BNCC	Base Network Control Center

BPO	Basic Postflight
BSSU	Bench Stock Support Unit
CAF	Combat Air Forces
CAMS	Core Automated Maintenance System
CANN	Cannibalization
CANN RATE	Cannibalization Rate
CAPCODE	Capability/reliability Code
CAVR	Combat Airborne Video Recorder
CDB	Central Data Base
CEMS	Comprehensive Engine Management System
CETS	Contractor Engineering and Technical Services
CFM	Computer Facility Manager
CFRS	Computerized Fault Reporting System
CHG	Chargeable (deviation)
CITS	Central Integrated Test System
CMIS	Close-loop Maintenance Information System
CND	Cannot Duplicate
COB	Co-located Operating Base
CORE	Combat Orientated Repair Evaluation
CORI	Combat Orientated Repair Initiative
COT	Current Operating Time
CR	Component Repair
CRF	Component Repair Flight
CR&R	Calibration, Repair, and Return
CRS	Component Repair Squadron
CSAS	Configuration Status Accounting System
CSRD	Computer Systems Requirements Document
CUM	Cumulative
CUM ACT	Cumulative Actual
CUM PROG	Cumulative Programmed
CX	Cancellation (deviation)
DAR	Data Automation Requirement/Record
DBM	Data Base Manager
DD	Delayed or Deferred Discrepancy
DDS	Deferred Discrepancy Summary
DEV	Deviation
DIFM	Due-in From Maintenance

DIG	Data Integrity Group
DIREP	Difficulty Report
DIT	Data Integrity Team
DLR	Depot Level Repairable
DMC	Defense Mega Centers
DOGM	Deputy Operations Group Commander for Maintenance
DOI	Date of Installation
DOM	Date of Manufacture
DOR	Due-out Release
DPU	Demand Processing Unit
DR	Deficiency Report
DUO	Due-out
EBO	Expected Back Orders
ECMP	Engine Conditioning Monitoring Program
ECMS	Engine Configuration Management System
EDD	Estimated Delivery Date
EHR	Event History Recorder
EL	Early Landing (deviation)
EMF	Equipment Maintenance Flight
EMS	Equipment Maintenance Squadron
ENMCB	Engine Not Mission Capable-Both
ENMCM	Engine Not Mission Capable-Maintenance
ENMCS	Engine Not Mission Capable-Supply
EOR	End of Runway
EPT	Empty Pylon Test
ESI	Equipment Status Inquiry
ET	Early Take Off (deviation)
ETIC	Estimated Time In Commission
EVL	Event List
FADM	Functional Area Documentation Manager
FAM	Functional Account Manager
FCF	Functional Check Flight
FH-UTE	Flying Hour Utilization
FMC	Fully Mission Capable
FOB	Forward Operating Base
FOD	Foreign Object Damage
FOL	Forward Operation Location

FOM	Facilitate Other Maintenance
FSA	File Server Administrator
FSC	Federal Stock Classification
FSE	Flying Scheduling Effectiveness
FSS	Forward Supply Station
GA, G/A	Ground Abort
GCSAS	Generic Configuration Status and Accounting Subsystem
HHQ	Higher Headquarters
HOF	Health of Forces/Fleet
HPO	Hourly Post flight
HSC	Home Station Check
IFC	In Flight Check
IFE	In Flight Emergency
ILM	Intermediate Level Maintenance
IM	Item Manager
IMIS	Integrated Maintenance Information System
IPL	Immediately prior to Launch
INS	Inertial Navigation System
INW	In-Work
IPI	In-Process Inspection
ISS EFF	Issue Effectiveness
ISO	Isochronal Inspection
JCN	Job Control Number
JDD	Job Data Documentation
JML (JSML)	Job Standard Master Listing
JQS	Job Qualification Standard
L-QPM	Logistics - Quality Performance Measures
LANTIRN	Low Altitude Night Terrain Infrared Navigation
LCL	Lower Control Limits
LG	Logistics Group
LGND	Logistics Non-Delivery (deviation)
LIMFACS	Limiting factors
LL	Late Landing (deviation)
LRU	Line Replaceable Unit
LSF	Logistics Support Flight
LSS	Logistics Support Squadron
LT	Late Takeoff (deviation)

MAIS	Maintenance Analysis and Information System
MAJCOM	Major Command
MC	Mission capable
MCC	Mission Capability Code
MDC	Maintenance Data Collection
MDD	Maintenance Data Documentation
MDS	Mission Design Series
MESL	Mission Essential Subsystems List
MICAP	Mission Capability
MLIR	Monthly Logistics Indicator Report
MIS	Maintenance Information Systems
MMH/FH	Maintenance man-hours per flying hour
MND	Maintenance Non Delivery (deviation)
MOC	Maintenance Operations Center
MPE	Management Process Evaluation
MPL	Maintenance Personnel Listing
MPR	Maintenance Personnel Roster (listing)
MSB	Main Support Base
MT	Maintenance (cx / deviation)
MTBCF	Mean Time Between Critical Failures
MTBF	Mean Time Between Failure
MTBM	Mean Time Between Maintenance
MTBMA	Mean Time Between Maintenance Actions
MTE	Multiple Tracked Equipment
MTTR	Mean Time To Repair
NDI	Non-Destructive Inspection
NDT	Non-Destructive Testing
NHA	Next Higher Assembly
NIE	Normally Installed Equipment
NI&RT	Numerical Index and Requirement Table
NMC	Not Mission Capable
NMCA	Not Mission Capable Airworthy
NMCB	Not Mission Capable Both
NMCBA	Not Mission Capable Both Airworthy
NMCBSA	Not Mission Capable Both Scheduled Airworthy
NMCBUA	Not Mission Capable Both Unscheduled Airworthy
NMCB-S	Not Mission Capable Both Scheduled

NMCB-U	Not Mission Capable Both Unscheduled
NMCM-S	Not Mission Capable Maintenance Scheduled
NMCM-U	Not Mission Capable Maintenance Unscheduled
NMCMA	Not Mission Capable Maintenance Airworthy
NMCSA	Not Mission Capable Supply Airworthy
NMCMSA	Not Mission Capable Maintenance Scheduled Airworthy
NMCMUA	Not Mission Capable Maintenance Unscheduled Airworthy
NRTS	Not repairable this station
NSN	National Stock Number
OBTS	On-Board Test System
OCF	Operational Check Flight
OG	Operations Group
OI	Operating Instruction
OP	Operations (cx / deviation)
OND	Operations Non-delivery
OPLAN	Operations Plan
OS	Operations Squadron
OSS	Operations Support Squadron
OT	Other (cx/deviation)
OT&E	Operational Test and Evaluation
OTU	Operating Time Update
OWC	Owning Workcenter
PAA	Primary Authorized Aircraft
PAI	Primary Aircraft Inventory
PDAI	Primary Development/Test Aircraft Inventory
PDM	Programmed Depot Maintenance
PE	Periodic Inspection
PIM	Product Improvement Manager
PIP	Product Improvement Program
PIWG	Product Improvement Working Group
PMAI	Primary Mission Aircraft Inventory
PMC	Partial Mission Capable
PMCB	Partially Mission Capable Both
PMCM	Partially Mission Capable Maintenance
PMCS	Partially Mission Capable Supply
PMEL	Precision Measurement Equipment Laboratory
PMI	Preventative Maintenance Inspection

PMO	Program Management Office
POAI	Primary Other Aircraft Inventory
POL	Petroleum, Oil, and Lubricants
POS	Peacetime Operating Stock
PQDR	Product Quality Deficiency Reporting
PRAM	Productivity, Reliability, Availability and Maintainability
PRD	Pilot reported discrepancy
PROG UTE	Programmed Utilization
PTAI	Primary Training Aircraft Inventory
PWC	Performing Work-Center
QA	Quality Assurance
QAE	Quality Assurance Evaluator
QAP	Quality Assurance Program
QAR	Quality Assurance Representative
QAT	Quality Assessment Tracking
QEC	Quick Engine Change
QLP	Query Language Processor
QPA	Quantity Per Application
QS	Quality Services
QVI	Quality Verification Inspection
RACC	Reparable Asset Control Center
RCM	Repair Cycle Monitor
RCP	Repair Cycle Processing
RCS	Reports Control Symbol
RCSU	Repair Cycle Support Unit
RDD	Required Delivery date
REJ	Reject List
REMIS	Reliability and Maintainability Information System
RIW	Reliability Improvement Warranty
RLP	Remote Line Printer
R&M	Reliability and Maintainability
R&R	Remove & Replace
RCT	Repair Cycle Time
RTOK	Retest OK
SAAM	Special Assignment Airlift Mission
SBSS	Standard Base Supply System
SCR	Special Certification Roster

SGA	Selective Generation Aircraft
SIOP	Single Integrated Operational Plan
S/N	Serial Number
SND	Supply Non-Delivery (deviation)
SORT UTE	Sortie Utilization
SP	Spare (deviation)
SPD	System Program Director
SPO	System Program Office
SPOC	Single Point Of Contact
SRAN	Stock Record Account Number
SRD	Standard Reporting Designator
SRU	Shop Replaceable Unit
SSM	System Support Manager
SU	Supply (cx/deviation)
SY	Sympathy (cx/deviation)
TAI	Total Aircraft Inventory
TCI	Time Change Item
TCS	TCTO Status Report
TCTO	Time Compliance Technical Order
TDI	Time Distribution Inspection
TEC	Type Event Code
TF	Total flyable
TIP	Transaction Interface Processor
TIN	Turn In
TISL	Target Identification Set Laser
TMDE	Test Measurement and Diagnostic Equipment
TNMCA	Total Not Mission Capable Airworthy
TNMCM	Total Not Mission Capable Maintenance
TNMCS	Total Not Mission Capable Supply
TOAI	Total Overall Aircraft Inventory
TOC	Technical Order Compliance
TOT	Total Operating Time
TPMCM	Total Partially Mission Capable Maintenance
TPMCS	Total Partially Mission Capable Supply
TRAP	Tanks, Racks, Adapters, and Pylons
TRIC	Transaction Identification Code
TRN	Turnaround Transaction

TS	Tail number swap or interchange (deviation)
TSS	TCTO Status Summary
UCL	Upper Control Limit
UCR	Unsatisfactory Condition Reports
UEM	Unit Engine Manager
UERS	Unscheduled Engine Removals
UJC	Urgency Justification Code
UMD	Unit Manpower Document
UND	Urgency of Need Designator
UPMR	Unit Personnel Management Roster
UTE	Utilization
VIRP	Variable Information Retrieval Program (GO81 version of QLP)
WCE	Workcenter Event
WCS	Weapons Control System
WDM	Workdays per Month
WOG	Work order generator
WRM	War Reserve Materiel
WRE	War Reserve/Readiness Engines
WRM	War Reserve Materiel
WSMIS	Weapon System Management Information System
WX	Weather (cx/deviation)
XB	Expendable, Base
XD	Expendable, Depot
XF	Expendable, Field

Attachment 5

DEFINITIONS

AVAILABILITY. The degree to which an item is in an operable and commitable state at the start of a mission when the mission is called for at an unknown (random) time. Availability is dependent on reliability, maintainability, and logistics supportability. (AFI 99-101)

LOGISTICS RELIABILITY. Logistics reliability is a measure of the systems ability to operate under the defined operational and support concepts using specified logistics resources (for example, spares and manpower). Logistics reliability recognizes the effect of all occurrences that place a demand on the logistics support system even when mission capability is unaffected.

MAINTAINABILITY. A measure of the time or maintenance resource needed to keep an item operating or restore it to operational (or serviceable, in the case of certain munitions) status. Maintainability may be expressed as the time to do maintenance (for example, maintenance downtime per sortie), as a usage rate of manpower resources (for example, maintenance man hours per flying hour). As the total required manpower (for example, Maintenance Personnel per Operational Unit), or as the time to restore a system to operational status (for example, Mean Downtime). (AFI 99-101/AFI 21-118)

MEAN TIME BETWEEN CRITICAL FAILURE (MTBCF). MTBCF is the mean time between any critical failure that will cause the system to be incapable of completing its designed function/mission (does not include degrades). MTBCF can also be defined as "The average time between failure of essential system functions." Normally the minimum MTBCF required will be established at a .96 probability of mission success excluding enemy action but including tactics to avoid enemy actions for the total aircraft system.

MEAN TIME BETWEEN MAINTENANCE ACTION (MTBMA). MTBMA is the mean time between any maintenance action, scheduled or unscheduled (example: calibration, cleaning, adjustment, servicing, repair, removal, etc.).

MTBMA is also categorized into types of actions when:

MTBMA-Type 1 identifies inherent failures (item fails due to its own internal failure pattern).

MTBMA-Type 2 identifies induced failures (item fails but not due to its own internal failure).

MTBMA-Type 6 identifies maintenance resources were expended due to policy, location, or calibration and no defects existed at the time of maintenance.

MISSION COMPLETION SUCCESS PROBABILITY (MCSP). MCSP is the probability that a system will complete a specified mission, given that the system was initially capable of performing that mission. MCSP is a measure of system reliability as it affects the mission, but excludes factors such as probability of kill (enemy action), circular error probability and other measures of capability. These excluded factors are considered during operations planning which determines specific ground threats, air threats, and target hardness. In order to determine MCSP a MTBCF must be established.

MISSION RELIABILITY. Mission reliability is a measure of the ability of a system to complete its planned mission or function. (DODI 5000-2)

RELIABILITY. Reliability is the probability that an item will perform its intended function for a specific interval under stated conditions. (DODI 5000-2) Another definition is: The probability that an item will perform a required function under specified conditions for a specified period of time or at a given point in time. Also, expressed as the average time an item will perform a specified function without failure. (AFM 11-1)

SYSTEM CAPABILITY. The number of flying hours/sorties expected (based on past occurrences) between flying hours or maintenance for a particular system/component which renders it unserviceable (broken). Degraded performance does not detract from system capability.

SYSTEM RELIABILITY. The percent of time a system was used with no discrepancies occurring. System performance that was degraded or unsatisfactory (all discrepancies) is used to compute system reliability. Normally expressed as the number of times a system was code 1 versus the number of times used.

The next step is to look at some ways to assess reliability. First let's review some basic formulas that lead us to overall system performance evaluation and work our way up to some more complicated processes.

COMBINED SYSTEM PERFORMANCE. To assess combined system performance you could use the following formula:

$$\frac{1}{M_T} = \sum \frac{1}{M_i}$$

This formula allows you to combine system or component MTBMAs in series to obtain aircraft or system overall performance. End results are easily ranked to identify good or bad performing aircraft, systems, or subsystems. Where M_i = the individual system or component MTBMA and M_T = the total MTBMA for all individual systems or components in series. Simply stated this formula provides the reciprocal of the sum of the reciprocals. In addition, you can substitute MTBF, MTBCF, or other indicators in place of MTBMA.

ASSESSING COMBINED PERFORMANCE OF COMPONENTS IN SERIES.
To assess the total MTBMA for components in series use the following formula:

$$M_i = N \times M_T \quad \text{or;}$$

When M_i is the MTBMA of each component in series, N is the total number of components in series and M_T is the total MTBMA for all the individual components in series. ***NOTE:*** that this formula assumes that the individual component MTBMAs are the same. In addition, all components must be operable for success.

ASSESSING COMBINED PERFORMANCE OF COMPONENTS IN PARALLEL. To assess the total MTBMA for components in parallel use the following formula:

$$M_T = M_i\,(1 + 1/2 + 1/3 + \ldots 1/N) \quad \text{OR;}$$

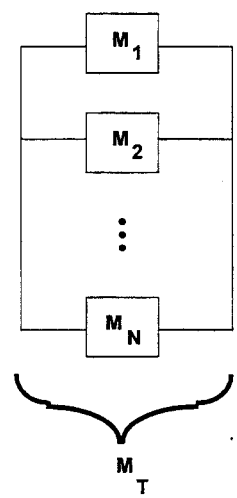

When M_T is the total MTBMA, all the individual components in parallel, M_i is the MTBMA each component in parallel, and N is the total number of components in parallel. ***NOTE:*** that this formula assumes that the individual component MTBMAs are the same and only one out of all components are required to function properly.

ASSESSING COMBINED PERFORMANCE OF DUAL COMPONENTS OR SYSTEMS. To assess the total MTBMA for dual system or a dual component string use the following formula:

$$M_T = M_1 + M_2 - \frac{M_1 M_2}{M_1 + M_2}$$

When $M_{(1,2)}$ is the MTBMA of the individual component string or dual system and M_T is the combined total MTBMA.

DETERMINING SYSTEM/SUBSYSTEM RELIABILITY. To determine a required subsystem reliability requirement with other known subsystem reliabilities and a known overall system reliability requirement use the following formula:

$$\text{Required Subsystem } (R_S) = \frac{\text{Required System } (R_T)}{R_1 \quad R_2 \quad R_{\bullet\bullet\bullet}}$$

ASSUME THE FOLLOWING RELIABILITIES:

$R_1 = .95$

$R_2 = .99$

$R_3 = .98$

$R_4 = .90$

$R_T = .829$

If the total system (R_T) is required to be .90, what would the reliability o R_4 have to be improved to?

$$\text{Req } R_4 = \frac{R_T}{R_1 \; R_2 \; R_3} = \frac{.90}{(.95)\,(.99)\,(.98)} = .976\ (R_S)$$

NOTE: The reliabilities for each R can be established at the component, subsystem, or system level to determine the reliability at the subsystem, system, and weapon system level.

MIXED MODEL SYSTEM (COMBINED) RELIABILITY To determine combined system reliability with systems in series and a system in parallel use the following formula:

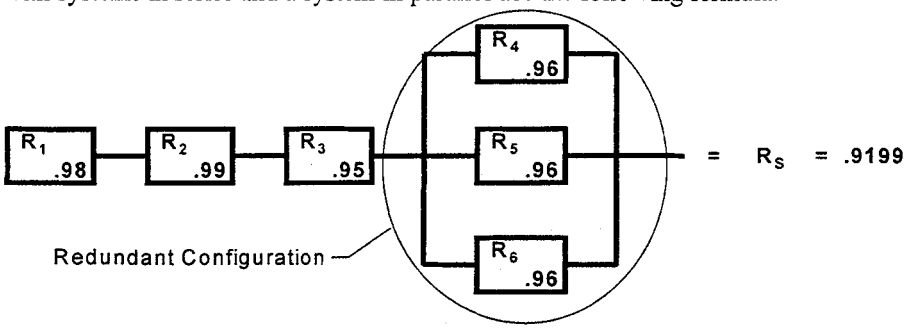

First solve for the redundant reliability:

$R_{4,5,6} = 1 - (1-R_4)(1-R_5)(1-R_6)$

Then: $R_S = R_1 R_2 R_3 R_{4,5,6}$

$R_S = R_1 R_2 R_3 [1-(1-R_4)(1-R_5)(1-R_6)]$

$R_S = (.98)(.99)(.95)[1-(1-.96)(1-.96)(1-.96)]$

$R_S = .92 [1-(.04)(.04)(.04)]$

$R_S = .92 [1-.000064]$

$R_S = .92 [.999936]$

$R_S = .9199$

Another example of mixed model reliability computation follows. This model assumes independence and active redundancy.

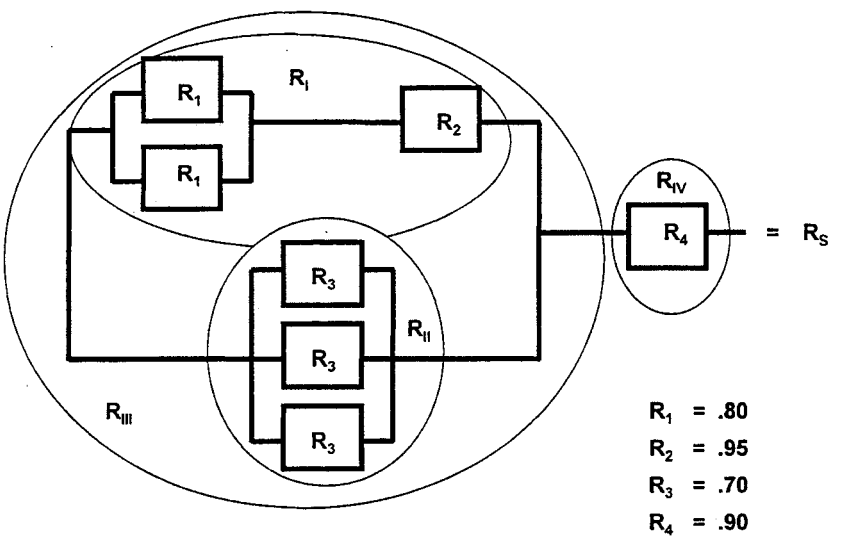

NOTE: Components with the same number (i.e., R_1 or R_3) are identical and consequently have the same reliability.

The first step is to break the system into subsystems as shown by the circles in the above diagram. A Roman numeral assigned to the R area identifies the subsystems. For example, the subsystem string that includes the parallel components R1 and serial component R2 is identified as subsystem R_I. The parallel components R_3 are shown as subsystem R_{II} and the combination of components of R_1, R_2, and R_3 are contained in the subsystem designation R_{III} where:

Subsystem R_I is

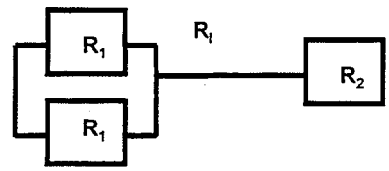

$R_I = [1-(1-R_1)^2]R_2$

Subsystem R_{II} is

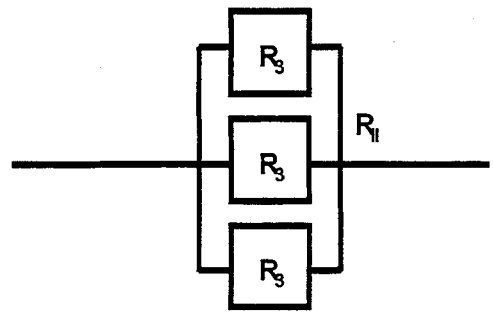

$R_{II} = 1-(1-R_3)^3$

Subsystem R_{III} is

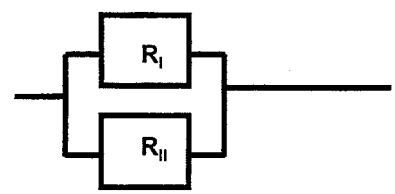

$R_{III} = 1-(1-R_I)(1-R_{II})$
$= 1-\{1-[1-(1-R_I)^2]R_2\}(1-R_3)^3$

Then the system R_S is

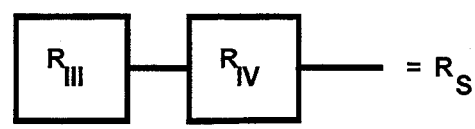

$R_S = R_{IV} R_{III}$
$R_S = R_{IV}\{1-\{1-[1-(1-R_1)^2]R_2\}(1-R_3)^3\}$
$R_S = .90\{1-\{1-[1-(1-.80)^2](.95)\}(1-.70)^3\}$

$R_S = .879$

DETERMINING REQUIRED SYSTEM RELIABILITY. The methods for determining system reliability as demonstrated above are only part of the weapon system evaluation process. They represent the state of heath for the period included in the data collection. They do not provide an indication of good or bad performance. In order to make decisions regarding performance, management needs to know what the requirements are. One method for determining the requirements for system reliability is by using the following formula:

$$(req)\,MTBCF = \frac{MissionDuration}{-LN(probability)}$$

When the mission duration is the planned mission duration that must be achieved for mission success, the -LN is the negative natural logarithm. The probability is the probability needed to successfully complete the mission. For example, the combat air patrol (CAP) mission for an F-15 may be planned for an eight-hour mission. Systems must be operational that allow the aircraft to launch, navigate, communicate, air refuel, and ultimately engage and destroy targets that are deemed hostile. Using this basic mission profile we would see that the minimum required MTBCF for the aircraft would be 196 hours if we planned for a .96 probability of meeting the mission objectives. Or;

$$(req)\,MTBCF = \frac{8\ hours}{-LN(.96)} = 196\ hours$$

If the combined system reliability for essential systems does not meet or exceed the 196 hours, then management has a problem with system performance that must be investigated in further detail.

The following table contains pre-computed MTBCF requirements for a given probability and mission duration using the required MTBCF formula.

Given Probability System Will Work For Mission Duration.

Table A5.1. Required MTBCF

	Probability					
Mission Duration	.96	.95	.90	.85	.80	.75
12 hours	294	234	114	74	54	42
10 hours	245	195	95	62	45	35
8 hours	196	156	76	49	36	28
7 hours	171	136	66	43	31	24
6 hours	147	117	57	37	27	21
5 hours	122	97	47	31	22	17
4 hours	98	78	38	25	18	14
3 hours	73	58	28	18	13	10
2 hours	49	39	19	12	9	7
1 hour	24	19	9	6	4	3

Evaluation Processes. Now that we have some of the fundamentals of reliability assessment and how to determine basic reliability requirements, let's look at a mission scenario and break down an evaluation process.

First, define the mission. Our missions vary by weapon system and even within the weapon system. Multiple role aircraft require multiple mission scenarios and evaluations to determine abilities to meet the mission. Even dedicated mission aircraft (i.e. air-to-air combat only) have peacetime and wartime mission scenarios that impact

differently upon the logistics systems supporting them. A good starting point is to review and understand the Minimum Essential Subsystem List (MESL) for your aircraft. It will provide a general starting point for you to develop specific operational scenarios and what is required to be operating.

Next, by using maintenance data collection (MDC) system failure rates, MDC can help to identify malfunctions or the impact of a failed component on system performance. The automated debriefing systems provide the best information to determine system performance. Specifically, use debriefing system capability data to develop MTBCF numbers used to assess mission success probabilities. Capability results should compliment the MESL docks and provide sortie related data to support sortie related predictions.

Develop MTBCFs for each system needed to perform satisfactorily for the scenario you have developed. If you hadn't noticed, you need to be talking to the pilots to build the scenarios. As with any other statistical sample, the larger the data base, the more accurate the results are, and the greater the confidence in the results. Use as much data as possible, but be sensitive to past changes (TCTOs) that would skew the results. Eliminate bad data.

Finally, compare the scenario requirements with current performance. If there are shortfalls your task is just beginning. If not, management has a product that provides some sense of satisfaction in knowing that they can expect good results. Use the same information to help in determining where to place emphasis for improvements. Let's say the MTBCF for engines is 210 hours, and the MTBCF for landing gear is 100 hours. Initially, you might say that the landing gear system is a bigger problem than the engines. But, if the required MTBCF for landing gear is only 25 hours, it is in fact out producing requirements, while the engine system could be greatly under performing if its required MTBCF was 400 hours. For example:

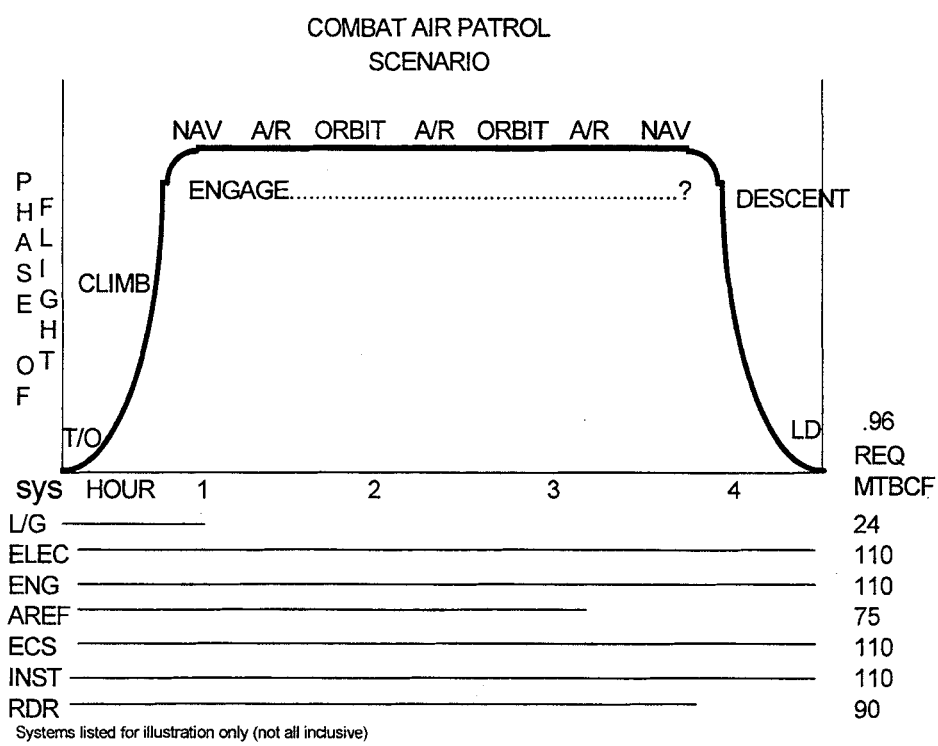

Attachment 6

ALGORITHMS FOR LOGISTICS - QUALITY PERFORMANCE MEASURES

Mission Capable (MC) Rate:

FMC RATE + PMCB RATE + PMCM RATE + PMCS RATE

Total Not Mission Capable - Maintenance (TNMCM) Rate:

NMCM RATE + NMCB RATE

Total Not Mission Capable-Supply (TNMCS) Rate:

NMCM RATE + NMCS RATE

Cannibalization Rate:

$$\frac{(\text{\# OF ACFT-TO-ACFT CANNS}) + (\text{\# OF ENGINE-TO-ACFT CANNS})}{\text{TOTAL SORTIES FLOWN}} \times 100$$

Code 3 Break Rate:

$$\frac{\text{\# OF SORTIES WITH CODE-3 LANDING STATUS (BREAKS)}}{\text{TOTAL SORTIES FLOWN}} \times 100$$

4/8/12-Hour Fix Rate:

4-Hour Fix Rate:

$$\frac{\text{\# CODE 3 BREAKS FIXED WITHIN 4 DUTY HOURS AFTER LANDING}}{\text{TOTAL CODE 3 BREAKS}} \times 100$$

8-Hour Fix Rate:

$$\frac{\text{\# CODE 3 BREAKS FIXED WITHIN 8 DUTY HOURS AFTER LANDING}}{\text{TOTAL CODE 3 BREAKS}} \times 100$$

12-Hour Fix Rate:

$$\frac{\text{\# CODE 3 BREAKS FIXED WITHIN 12 DUTY HOURS AFTER LANDING}}{\text{TOTAL CODE 3 BREAKS}} \times 100$$

Total Abort Rate:

$$\frac{\text{\# AIR ABORTS} + \text{\# GROUND ABORTS}}{\text{TOTAL SORTIES FLOWN} + \text{GROUND ABORTS}} \times 100$$

Air Abort Rate:

$$\frac{\text{\# OF AIR ABORTS}}{\text{TOTAL SORTIES FLOWN}} \times 100$$

Ground Abort Rate:

$$\frac{\text{\# OF GROUND ABORTS}}{\text{TOTAL SORTIES FLOWN + GROUND ABORTS}} \times 100$$

Average Number Of Aircraft Possessed:

$$\frac{\text{TOTAL POSSESSED HOURS (MONTH TO DATE)}}{\text{24 x \# of DAYS (MONTH TO DATE)}}$$

Average Sortie Duration (ASD):

$$\frac{\text{HOURS FLOWN}}{\text{SORTIES FLOWN}}$$

Sortie UTE Rate:

$$\frac{\text{SORTIES FLOWN}}{\text{NUMBER OF POSSESSED AIRCRAFT}}$$

Hourly UTE Rate:

$$\frac{\text{HOURS FLOWN}}{\text{NUMBER OF POSSESSED AIRCRAFT}}$$

Flying Scheduling Effectiveness Rate:

$$\frac{\text{TOTAL DEVIATIONS}}{\text{TOTAL SORTIES SCHEDULED}} \times 100$$

Total Sorties Scheduled = Home base, deployed, or otherwise scheduled + Off Base flown.

Breakdown of Deviation Categories (Visibility of Causes).

$$\text{MAINTENANCE RATE} = \frac{\text{MAINTENANCE DEVIATIONS}}{\text{TOTAL SORTIES SCHEDULED}} \times 100$$

$$\text{OPERATIONS RATE} = \frac{\text{OPERATIONS DEVIATIONS}}{\text{TOTAL SORTIES SCHEDULED}} \times 100$$

$$\text{SUPPLY RATE} = \frac{\text{SUPPLY DEVIATIONS}}{\text{TOTAL SORTIES SCHEDULED}} \times 100$$

$$\text{HHQ RATE} = \frac{\text{HIGHER HEADQUARTERS DEVIATIONS}}{\text{TOTAL SORTIES SCHEDULED}} \times 100$$

$$\text{WX RATE} = \frac{\text{WEATHER DEVIATIONS}}{\text{TOTAL SORTIES SCHEDULED}} \times 100$$

$$\text{SYMP RATE} = \frac{\text{SYMPATHY DEVIATIONS}}{\text{TOTAL SORTIES SCHEDULED}} \times 100$$

$$\text{OTHER RATE} = \frac{\text{OTHER DEVIATIONS}}{\text{TOTAL SORTIES SCHEDULED}} \times 100$$

Weapons Release Reliability Rate:

$$\frac{\text{No of Successful Releases}}{\text{No of Attempts}} \times 100$$

Gun Fire-Out Rate:

$$\frac{\text{No of Successful Bursts}}{\text{No of Attempts}} \times 100$$

Commitment Rate:

$$\frac{\text{CUMULATIVE NUMBER OF COMMITTED AIRCRAFT}}{\text{CUMULATIVE NUMBER OF POSSESSED AIRCRAFT}} \times 100$$

Logistics Departure Reliability Rate: Total departures minus logistics deviations divided by total departures times 100. (C-130 & C-21 units only)

Attrition: This is calculated by dividing the categorized/total cancellations by the total number of scheduled sorties.

$$\text{Total Monthly Attrition} = \frac{\text{Total Cancellations}}{\text{Total Sched Sorties}} \times 100$$

$$\text{Exp. Weather Attrition} = \frac{\text{Weather Cancellations}}{\text{Total Scheduled Sorties}} \times 100$$

Average Delayed/Deferred Discrepancies Rate: Each first working day of the week, analysts will take a "snap shot", for each reportable MDS, of the total number of deferred discrepancies for both maintenance and supply (AWM & AWP). The time frame will be for the previous work week. The "snapshot" will include a total of all 781A & 781K write-ups. Then, the following formula will apply:

Maintenance Deferred Discrepancies (AWM):

$$\frac{\text{TOTAL AWM (SNAPSHOT) DISCREPANCIES}}{\text{AVERAGE POSSESSED AIRCRAFT}}$$

Parts Deferred Discrepancies (AWP):

$$\frac{\text{TOTAL AWP (SNAPSHOT) DISCREPANCIES}}{\text{AVERAGE AIRCRAFT POSSESSED}}$$

Total Monthly Delayed/Deferred Discrepancies For Maintenance and Parts: A figure derived by the sum of no less than four weekly snapshots during month. The following formula will use the weekly rates to form a cumulative monthly rate.

Monthly AWM Rate:

$$\frac{\text{AWM RATE(WK1)} + \text{AWM RATE(WK2)} + \text{AWM RATE(WK3)} + \text{AWM RATE(WK4)}}{\text{\# OF WEEKLY RATES (IN THIS SAMPLE: 4)}}$$

Monthly AWP Rate:

$$\frac{\text{AWP RATE(WK1)} + \text{AWP RATE(WK2)} + \text{AWP RATE(WK3)} + \text{AWP RATE(WK4)}}{\text{\# OF WEEKLY RATES (IN THIS SAMPLE: 4)}}$$

Monthly Total Delayed/Deferred Discrepancy Rate: The final average monthly deferred discrepancy rate reported and will be the total of the monthly AWM and AWP rates determined from the sum of both formulas in para 2-3k.

Average Hangar Queens:

$$\frac{30\ (\text{Total Hangar Queen Days in Reporting Period})}{30\ (\text{Days in Reporting Period})}$$

Repair Cycle Time by Segments (Buckets of Time):

Pre =	The time a serviceable part is issued from Supply until the broken part is received by the backshop for repair.
Repair =	The time a part remains in the shop until repaired, minus time spent awaiting parts (AWP).
Post =	The time it takes for the repaired part to be turned back into Supply.

$$\text{Pre - Maintenance Time} = \frac{\text{Total Number of Days in Pre - Maintenance}}{\text{Total Number of Items Repaired}}$$

$$\text{Repair Time} = \frac{\text{Total Number of Days in Repair - AWP days}}{\text{Total Number of Items Repaired}}$$

$$\text{Post - Maintenance Time} = \frac{\text{Total Number of Days in Post Maintenance}}{\text{Total Number of Items Repaired}}$$

$$\text{Total Repair Cycle Time} = \text{Pre - Maintenance Days} + \text{Repair Days} + \text{Post - Maintenance Days}$$

Repeat/Recur Rates:

$$\textbf{Repeat Rate} = \frac{\textbf{Total Number of Repeat Discrepancies}}{\textbf{Total Number Pilot Reported Discrepancies}} \times 100$$

$$\textbf{Recur Rate} = \frac{\textbf{Total Number of Recurring Discrepancies}}{\textbf{Total Number Pilot Reported Discrepancies}} \times 100$$

$$\textbf{Repeat / Recur Rate} = \textbf{Repeat Rate} + \textbf{Recur Rate}$$

Spare Engine Rate:

$$\text{Monthly Avg Number of Spares} = \frac{\text{Snapshot WK 1 + Snapshot WK2 + Snapshot WK 3 + Snapshot WK 4}}{\text{\#Weekly Snapshots [In this sample (4)]}}$$

Supply Issue Effectiveness Rate:

$$\text{Supply Issue Effectiveness Rate} = \frac{\text{Line Items Issued}}{\text{Line Items Issued + Line Items Back ordered}} \text{ X } 100$$

Attachment 7

DEFINITIONS AND METRICS

The following information is provided as standard tools for tracking and displaying information for various MAJCOM weapons systems. The listed calculation methods indicated reflect the metrics that will be used when preparing the Monthly Summary (LG), other reports and requests for special studies. Categories of indicators are sequenced alphabetically by key words. Metrics used by the unit will be dependent upon the weapon system and gaining MAJCOM.

Table A7.1. Weapons Systems Definitions and Metrics.

DEFINITIONS	*FORMULA*
Accomplishment Utilization Report (AUR). A background report showing flying schedule accomplishment on a daily, weekly, or monthly basis.	None CAMS screen 362 GO81 VIRP 9055
Addition. Any sortie/Home Station Launch flown that was added to the flying schedule after the daily schedule is officially finalized for the next day. (See deviation reporting procedures below) FCF is flown as scheduled. NOTE: Addition of multiple sorties (i.e. FOL) will be counted as multiple sorties added.	Number of additions / Number of sorties scheduled
Air Abort (AA or A/A) Rate. The total number of AA per 100 sorties flown (do not include sympathy air aborts in the calculations). Its purpose is to reflect the percentage of unsuccessful missions once the aircraft is airborne.	Number of air aborts / Sorties flown *100
Abort, Total Rate. The sum of the air abort rate plus ground abort rate.	Total Abort Rate = ground abort rate + air abort rate
Air Abort (AA or A/A). An airborne aircraft that can not complete its primary or alternate mission.	CAMS screen 362 GO81 VIRP 9055
Air Abort (Maintenance). The deviation of an aircraft back to home station or other location other than the destination, prior to normal scheduled mission completion, for reasons related specifically to aircraft system problems while in-flight. (Includes local, training, & air refueling missions.)	Number of maintenance air aborts / Number of sorties flown *100
Aircraft Average Fleet Time. The average number of remaining flying hours until the next periodic or phase inspection. This is the prime leading logistics indicator that identifies the unit's ability to sustain future Opns tempo and inspection flow requirements.	Using the "TDI" (screen 400) on the last day of the month and based on 200-hr phase average, use the average time divided by the inspection interval. Example: 103.75 / 200 = .51875 * 100 = 51.9% Desired = 50% (± 5%)

Aircraft Configuration Management (ACM) provides the capability to determine the actual versus approved configuration of an aircraft. The intent of the configuration management subsystem is to ensure that selected serially controlled and/or time change items (TCI) are properly loaded to the applicable database and to track compliance with TCTOs	P & S tracked, through CAMS/GO81/REMIS
Aircraft Maintenance Scheduling Effectiveness (MSE Rate). The MSE rate is the percentage of scheduled aircraft maintenance events that were started on or prior to the date printed in the weekly maintenance schedule. Its purpose is to measure the success of a unit in executing its planned maintenance events.	Weighted points are determined locally by importance Maintenance points earned ——————————— * 100 Maintenance points possible
Aircraft Possessed Hours. Total number of clock hours accumulated for a specified period for all of the possessed aircraft for a unit.	CAMS screen 459 G081 VIRP 9025
Attrition. Losses based on historical data. Sorties added to the flying schedule and unit's sortie contract to allow for projected losses due to maintenance, weather, operational, and other calculated losses. They reflect unit seasonal/historic variations. Factors used to compute attrition will be Maint., Ops., Supply, Higher Headquarters, Weather and Other. NOTE: For the computation, "Other" must not include sorties canceled due to completion of the monthly/annual flying program. When developing these factors, use normal statistical applications. Spares are used to compensate for unit controlled factors. Attrition and spare factors will be computed for and used for each unit. Use as much historical data as required to ensure that seasonal variations are considered and then determine a basis for attrition and spare factors. When computing attrition use the total sorties lost for each particular category.	Attrition computation example: Maintenance = 30cx/1000schd sorties = .03 Operations = 20cx/1000schd sorties = .02 Supply = 05cx /1000schd sorties = .005 HHQ = 02cx /1000schd sorties = .002 Weather = 50cx/1000schd sorties = .05 Sympathy = 10cx/1000schd sorties = .01 Air Traffic = 02cx/1000schd sorties = .002 Other = 05cx/1000schd sorties = .005 Total = 124cx/1000 schd sorties = .124 attrition factor Sorties Required = 1000 Attrition Factor = .124 1000 (required sorties) 1 - attrition factor 1- .124 = .876 (Total sorties to schedule) = 1141.552 ≈ 1142 sorties

Attrition Rates. Attrition rates are used primarily for: (1.) Programmatically, they are used to forecast the number of scheduled sorties or missions needed to meet the requirement. (2.) During program execution, attrition rates help pinpoint where the flying schedule is deviating from the plan, and where to focus management actions	Total Attrition rate : Total cancellations / Total sorties or missions scheduled * 100 Weather Cancellation Rate: Weather Cancellations / Sorties or missions scheduled * 100 **Operations Non-delivery {cancellation):** Operations Non Delivery (cancellation) / Sorties or missions scheduled * 100 **Ops Cancellations:** Ops deletions / Sorties or missions scheduled * 100 **Other Cancellations:** Other cancellations / Sorties or missions scheduled * 100
Average Hangar Queens: An aircraft that has not flown for 30 consecutive days.	An average computed by dividing the total Hangar Queen days accrued in the reporting period by the inclusive number of days in the reporting period, e.g., 20 Hangar Queen days divided by 30 days in the reporting period equals .67 average Hangar Queens.
Average Mission length. The flying time for a mission from beginning to completion.	Total Flying Time / Total Missions
Average Possessed Aircraft. Average number of aircraft possessed for specified period of time. CAMS screen 459 GO81 VIRP 9025	Total possessed hours / 24 hours / Number of days in the period
Average Sortie Duration (ASD). Average flying time of a sortie.	Total hours flown / Total sorties or departures
Awaiting Maintenance (AWM) Rate. The total deferred discrepancies for maintenance, divided by possessed aircraft. CAMS screen 380 GO81 VIRP 67150	Total deferred maintenance discrepancies / Average possessed aircraft

Awaiting Parts (AWP) Rate. The total deferred discrepancies that require parts and have a valid supply requisition number, divided by possessed aircraft. CAMS screen 380 GO81 VIRP 67150	Total deferred discrepancies with parts on requisition Average possessed aircraft
Backup Aircraft Inventory (BAI). Quantity of aircraft above the primary aircraft inventory quantity to permit scheduled & unscheduled maintenance modifications, inspections, and repair without reduction of aircraft available for operational missions.	None
Base Repair Capability. Capability of unit maintenance complex to repair the components with existing experience & equipment.	Action taken codes (A/F/G/K/L/Z) *100 Sum of action taken codes (A/F/G/K/L/Z/1/2/3/4/5/6/7/8/9)
Base Self-Sufficiency. Capability of unit's maintenance complex to repair authorized components.	Action taken codes (A/F/G/K/L/Z) * 100 Action taken codes (A/F/G/K/L/Z/2/3/4/5/6/7/8/9)
Break. System malf occurring in-flight that renders aircraft NMC after landing. Air abort for maint problems is a break & should be included.	None
Break Rate. The percentage of landing status Code 3 (NMC) sorties. This rate is an early warning indicator, which leads to lower MC rate and focus on the quality of aircraft maintenance and parts.	Number of sorties with Code 3 landing status * 100 Total sorties flown
Cancellation. Any sortie that was scheduled in the weekly flying schedule that did not take off within 2 hours of its published time. NOTE: scheduling of multiple sorties (i.e. FOL) if canceled will be counted as multiple sorties canceled.	None
Cancellation Rate. Percent of all scheduled sorties or departures that were canceled.	Number of cancellations * 100 Schedule sorties or departures
Cannibalizations. Removal (action taken "T") of components from an (aircraft or engine to another aircraft.	None
Cannibalization Man-hours. The total work-hours expended for action taken codes "T" and "U".	CAMS screen 105 "AT" = "T", "U" GO81 VIRP 804B "AT" = "T", "U"
Cannibalizations Man-hours per Average Possessed Aircraft. Average number of cannibalization removals (action taken "T" and "V") per average possessed acft, this rate includes any aircraft-to-aircraft or engine-to-aircraft cannibalization actions. The number represents the average man-hours expended per possessed acft.	Total number of cann man-hours (T & U) Average possessed aircraft
Chargeable Aircraft (CHRG). The number of aircraft against which units should build their flying programs. The two most common situations are: units in conversion and aircraft transferred due to PDM/Depot/Mod requirements. Chargeable aircraft will be calculated for applicable units, by month.	None

Commitment Rate: The percent of aircraft that are scheduled/designated for headquarter's (DOD, HAF, MAJCOM, NAF) tasked missions, spares, alerts, local missions, ground trainers, and static displays.	None
Crew Show. The time that the aircrew arrives at the aircraft.	None
Cumulative (CUM): The quarterly or fiscal year cumulative performance of an indicator.	None
Data Integrity Teams (DIT). These are teams established to evaluate maintenance data documentation that may cause data integrity problems.	None
Deferred Discrepancy. Malfunctions or discrepancies not creating NMC or PMC status but are not corrected "on the spot" are considered deferred discrepancies.	None
(AVG) Delayed Discrepancy or Deferred Discrepancy (DD). This rate is the average number of deferred write-ups that do not impair mission effectiveness for possessed aircraft. Add up those write-ups that are not worked within three (3) duty days as DDs. (Method used in 7401 summary)	Using four samples (DOM) one on the last day of each week. Example #AWMs #AWPs #Acft Week 1 49 100 50 Week 2 55 110 55 Week 3 25 135 53 Week 4 30 105 50 *Total 159 450 208* *Total #AWMs (159) / Total # Acft (208) = Avg AWM per aircraft (.76)* *Total #AWPs (450) / Total # Acft (208) = Avg AWP per aircraft (2.16)* *Total Delayed Discrepancy = Avg AWM + Avg AWP (.76 + 2.16 = 2.9)*
Delayed Discrepancy. A non-grounding discrepancy that has been delayed or deferred & not worked within 24 hours from time discrepancy was found. Usually these discrepancies are transferred from AFTO Form 781A to 781K. Pre-planned time changes & TCTOs that require parts are not considered delayed until schedule day for completion is past, & action is not completed.	None
Deletions. Cancellations of a scheduled launch/sortie for any reason. NOTE: scheduling of multiple sorties (i.e. FOL) if deleted will be counted as multiple sorties canceled.	None
Departure. Used in the Military Air Integrated Reporting System (MAIRS), and is synonymous with takeoff. (AMCPAM 21-102, Att 1)	None

Departure Reliability, Logistics. Percent of total departures that did not have a delay caused by logistics (method used in LG summary and briefings). (AMCPAM 21-102, Att 1)	$\frac{\text{Total departures minus logistics delays}}{\text{Total departures}} * 100$
Departure Reliability, Raw (Overall). Percent of total departures that did not have a deviation for any reason. (AMCPAM 21-102, Att 1)	$\frac{\text{Total departures minus total deviations}}{\text{Total departures}} * 100$
Deviation. Category encompassing those reasons for alterations or interruptions to daily flying schedule. Early/late takeoffs, cancels, air aborts, delays & adds are deviations. Deviations are used when calculating flying schedule effectiveness. 1. Additions: Any sortie or departure flown that was not on the published weekly schedule. (FCFs are flown as scheduled.) 2. Deletions/Cancellations: Any sortie or departure that was scheduled in the weekly flying schedule that did not take off within 2 hours of its published time. a. Maintenance (MT). Deviations resulting from actions taken for maintenance considerations. b. Operations (Opns). Deviations resulting from operations/air-crew actions, including substitution/crew illness/ mission changes, causing an early/late takeoff or cancellation c. Supply (SU). Deviations resulting from a Partially Mission Capable (PMCS) or Not Mission Capable Supply (NMCS) condition or for late Supply or Petroleum Oil Lubricant (POL) delivery. d. Higher Headquarters (HQ). Deviations resulting from a higher headquarters tasking including *closing of low level route or* external customer directed mission change. e. Weather (WX). Deviations for aircraft which takeoff early, late, abort, or are added or canceled due to weather conditions. f. Sympathy (SY). Deviations occurring when a flight of two or more aircraft, under the command of a flight leader or instructor pilot are canceled, aborted, or late due to a cancellation, abort, or delay of one of the aircraft in the flight or a supporting flight. g. Air Traffic Control (AT). Deviations resulting from air traffic control problems (for example, flight clearance delays, tower communication failures, conflicting air traffic, runway change, or runway closure. h. Other (OT). Deviations resulting from unusual circumstances not covered by the above definitions may use this code (e.g. bird strikes, damage during air refueling, unscheduled alert swap out).	None

i. Exercise (EX). Sorties added or canceled due to the initiation of an unannounced exercise.	
Deviations. Chargeable vs. Non-Chargeable (1) Chargeable. Deviations that the unit has control over. (Personnel, pilots, maintenance, parts, scheduling, etc.) (2) Non-Chargeable. Deviations that were not within the units control. (Weather, FAA, tower/traffic delays, clearance, HHQ, Etc.)	None
Drones. An unmanned aircraft remotely controlled for testing or target training.	None
Dropped Object Rate. Rate of dropped objects per 100 departures or sorties (method used in the LG summary and briefings).	$\frac{\text{Number of dropped object incidents}}{\text{Sorties or departures}} * 100$
Early/Late Takeoffs. Any sortie on the weekly flying schedule that takes off 0.3 hours before or after its scheduled takeoff time.	None
Engine Test Cell Reject Rate. Percent of total engines tested cells that were rejected.	$\frac{\text{Total engines rejected}}{\text{Total engines tested}} * 100$
Engine Unscheduled Removal. An engine removed due to malfunctioning of the engine caused by breakdown, deterioration, metal fatigue, wear, etc.	Total Unscheduled Removals
Fix. Completing maintenance actions on in-flight discrepancies (NMC) upgrading the status to PMC or FMC.	None
Fix Rate. (Method #1) This is the percent of all broke aircraft (landing status Code 3) that are returned to MC status within a specific time period (i.e. 4, 8, or 12 hours). 4-hr Fix Rate. The cumulative percentage of aircraft breaks recovered within 4-duty hours of landing. For fighters, an aircraft break and a 4-hour fix interval is equivalent to a surge sortie opportunity lost in wartime. 8-hr Fix Rate. The cumulative percentage of aircraft breaks recovered within 8-duty hours of landing. This interval is used for fighter aircraft. 12-hr Fix Rate. The cumulative percentage of aircraft breaks recovered within 12-duty hours of landing. This interval is reported for all aircraft other than fighters.	$\frac{\text{\# of Code 3 acft returned to MC within 4 hours}}{\text{Total number of Code 3 acft}} * 100$ $\frac{\text{\# of Code 3 acft returned to MC within 8 hours}}{\text{Total number of Code 3 acft}} * 100$ $\frac{\text{\# of Code 3 acft returned to MC within 12 hours}}{\text{Total number of Code 3 acft}} * 100$
Flying Hours Allocated. Determined by ANG/XOOH for specific unit (Opns) requirements.	None

Flying Scheduling Effectiveness (FSE) *Rates.* (also referred to as sortie scheduling effectiveness rate). The FSE rate is the percentage of scheduled sorties a unit successfully launches on time. Its purpose is to measure the success of a unit to complete its pre-planned flying schedule.	Total deviations / Total sorties scheduled * 100
Flying Schedule Effectiveness Rate, Logistics. Percent of total scheduled sorties or departures plus adds minus cancels of scheduled departures or sorties plus additions.	Total scheduled sorties or departures + all adds – logistics cancels / Total scheduled departures + all adds * 100
Fly Mission Capable Rate (FMC). Percent of aircraft possessed hours that the assigned aircraft could perform all its assigned missions over a specified period (method used in LG summary and briefings).	FMC hours / Total possessed aircraft hours * 100
Functional Check Flight (FCF) Release Rate. The FCF release rate is the percentage of aircrafts that successfully complete an FCF versus the total number of FCFs attempted. Its purpose is to monitor the quality of maintenance performed following the repair of critical components or systems that require an FCF prior to resuming normal flying.	Total FCFs released / Total FCFs attempted * 100
Ground Abort (GA G/A). An event that prohibits an aircraft from becoming airborne, after the aircrew arrival.	None
Ground Abort (GA or G/A) rate. The GA rate is the total number of ground aborts (do not include sympathy ground aborts in the total number of ground aborts). Its purpose is an early warning indicator for quality of maintenance in regards to preflight and basic post flight (BPO) maint.	Total number of ground aborts / Total sorties flown + total number of ground aborts * 100
Hangar Queen. An aircraft which has not flown for at least 30 consecutive days. This particular aircraft is generally the same aircraft that is used for parts cannibalization to other aircraft.	None
Higher Headquarters. Deviations resulting from higher headquarters tasking, or change in tasking, which are received too late for inclusion into the flying schedule	None
Hours Possessed. The total number of hours of possessed aircraft.	CAMS screen #459 (GO81 9025)
In Flight Emergency (IFE). An airborne aircraft that encounters a situation or emergency that results in an IFE being declared by the aircrew.	None
Issue Effectiveness Rate. The percentage of requirements immediately satisfied by Base Supply, used to measure how well customers are supported. It is used as a macro index for effectiveness from all supply sources	Total line items issued / Total line items issued + total line items backordered

Labor-Hours Documented. Total direct labor hours documented by maintenance personnel for a specific MDS and SRD within that MDS. Includes hours documented to aircraft engine & excludes transient maintenance labor-hours (type maintenance "Y"). Note Exemptions	None
Labor Hours per Cannibalization. Total labor hours expended for a cannibalization removal ("T" action) & installation ("U" action) after issue of part (method used in LG summary and briefings).	Total "T" and "U" labor man-hours ——— Total number of cannibalization actions
Late Takeoff & On Time Takeoff Rate. A late takeoff occurs when a mission departs .3 hours or more after its scheduled departure time. On time rate is the percent of all scheduled sorties or departures that took off on time.	Total number of late takeoffs / Number of scheduled sorties - cancellations * 100
Logistics Non-delivery (LGND) Rate. This rate is the number of maintenance non-deliveries (MND) or losses, plus supply non-deliveries (SND) or losses, against missions scheduled. The overall LGND rate is an early warning indicator for the quality of logistics effectiveness and the health of the fleet.	LGND RATE Number of LGNDs / Sorties or missions scheduled * 100 MND RATE Number of MNDs / Sorties or missions scheduled * 100 SND RATE Number of SNDs / Sorties or missions scheduled * 100
Maintenance Delivery Reliability Rate - Percent of time the aircraft is mission capable at scheduled or actual crew show time (whichever is sooner) & aircraft is capable of flight & was accepted by aircrew (method used in LG summary and briefing). NOTE: This indicator is not affected by AFI 21-103 status reporting rules.	Total departures or sorties minus number of aircraft broke at scheduled or actual crew show time (whichever is sooner) / Total departures or sorties * 100
Maintenance Overtime Rate. Percent of total labor hours expended documented as overtime hours (categories of labor 2 & 4)	Direct overtime (CatLab 2 & 4) / Total labor hours expended (including overtime) * 100
Maintenance Trainers. Aircraft employed for ground training, which do not require airborne operations.	None

Mean Time Between Maintenance (MTBM), AKA Mean Time Between Failure (MTBF). A measure of how well a particular item/system performs. Analysis of past data can indicate how well an item/system is expected to perform. Items/system can be tracked by moving averages to show possible trends in performance. A negative MTBM would indicate poorer reliability. (ANGI 21-101)	End item flying time or operating time x quantity per application (QPA) ——————————— Failures (AT codes of F, G, K, L, Z and P minus any bench checked serviceable) NOTE: Quantity per application (QPA) comes into play when engines (most weapon systems have multiple engines) or similar systems are the subject of the subject computation
Mission Capable (MC) Rate. Percent of aircraft possessed hours that were FMC or PMC over a specified period (method used in summaries & briefings).	FMC = PMC hours ——————— * 100 Possessed hours
Mission Design Series (MDS). Designation of PAI or POAI aircraft.	(i.e. F-016-A)
Monthly Flying Hour/Sorties Scheduled. The combined weekly schedules as refined at the daily planning/scheduling meeting and accepted by Ops/Maint. (Including multiple FOL sorties scheduled)	None
Monthly Flying Hour/Sorties Flown. By MDS as directed and obtained through CAMS/REMIS and verified with Operations.	None
Not Mission Capable (NMC) Rate. Percent of aircraft possessed hours that were not capable of performing any assigned missions and classified as NMCM, NMCS, & NMCB for a specified period.	NMCM + NMCS + NMCB hours ——————————— * 100 Possessed hours
Not Mission Capable Both Rate (NMCB). Percentage of aircraft possessed hours that were NMCB for a unit over a specified period.	NMCB hours ——————— * 100 Possessed hours
Not Mission Capable Both Maintenance and Supply Scheduled (NMCB-S) Rate. The percentage of aircraft that are not mission capable due to both sched. maint. and supply for a unit over a specified period (method used in LG summary and briefings).	NMCB-S hours ——————————— * 100 Total possessed aircraft hours
Not Mission Capable Both Maintenance and Supply Unscheduled (NMCB-U) Rate. The percentage of aircraft that are not mission capable due to both unscheduled maint. and supply for a unit over a specified period (method used in LG summary and briefings).	NMCB-U hours ——————————— * 100 Total possessed aircraft hours
Not Mission Capable Maintenance (NMCM). Percent of aircraft possessed hours that were NMCM for a unit over a specified period.	NMCM hours ——————— * 100 Possessed hours
Not Mission Capable Maintenance Scheduled (NMCM-S) Rate. The percentage of aircraft that are not mission capable due to scheduled maintenance reasons for a unit over a specified period.	NMCM-S hours ——————————— * 100 Total possessed aircraft hours

Not Mission Capable Maintenance Unscheduled (NMCM-U) Rate. The percentage of aircraft that are not mission capable due to unscheduled maintenance reasons for a unit over a specified period (method used in LG summary and briefings).	NMCM-U hours / Total possessed aircraft hours * 100
Not Mission Capable Supply (NMCS) Rate. The percentage of aircraft that are not mission capable due to supply for a unit over a specified period (method used in LG summary and briefings).	NMCS hours / Total possessed aircraft hours * 100
Operational Check Flight (OCF). The first flight of an aircraft that has had extended downtime or extensive maintenance which does not require an FCF.	None
Overall Operational Scheduling Effectiveness. Percent of total scheduled departures/sorties which were not late, canceled, or added.	Total sorties or departures – (all early/ lates + adds) / Total scheduled sorties or departures * 100
Partial Mission Capable Rate (PMC). Percent of aircraft possessed hours that were PMCM, PMCS, & PMCB for a unit over a specified period	PMCM, PMCS & PMCB hours / Total possessed hours * 100
Partially Mission Capable Both Maintenance and Supply (PMCB) Rate. The percentages of aircraft that are partially mission capable for both maintenance and supply reasons.	PMCB hours / Total possessed hours * 100
Partial Mission Capable Maintenance Rate (PMCM). Percent of aircraft possessed hours that were PMCM for a unit over a specified period.	PMCM hours / Total possessed aircraft hours * 100
Partial Mission Capable Supply Rate (PMCS). Percent of aircraft possessed hours that were PMCS for a unit over a specified period. (method used in LG summaries and briefings).	PMCS hours / Total possessed aircraft hours * 100
Possessed Aircraft. Assigned aircraft available to accomplish primary mission of the unit.	None
Possession Identifier. 2-character code that identifies current operational or maintenance possession category of an aircraft. Codes are located in REMIS pushdown tables in CAMS via screen number 127. Poss codes include "CA", "CB", "TF", "IF", or "ZB".	None
Primary Aircraft Inventory (PAI). Aircraft assigned to meet primary aircraft authorization (includes PDAI, PMAI, POAI, & PTAI aircraft).	PDAI + PMAI + POAI + PTAI (Does not include BAI aircraft assigned)
Primary Authorized Aircraft (PAA). The number of aircraft authorized to accomplish the units primary mission.	None
Primary Development & Test Aircraft Inventory (PDAI). Aircraft assigned primarily for testing for purpose of research, development, test & evaluation, operational test & evaluation, or for testing programs.	None
Primary Mission Aircraft Inventory (PMAI). Aircraft assigned to perform the unit wartime mission.	None

Primary Other Aircraft Inventory (POAI). Aircraft required for special missions not defined elsewhere.	None
Primary Training Aircraft Inventory (PTAI). Aircraft required primarily for technical and specialized training of crew or leading to aircrew qualification.	None
Quantity Per Application (QPA). The number of duplicate items installed on an aircraft.	Note: The QPA is used as a multiplier for calculating Mean Time Between Failures (MTBF) for systems, subsystems and components.
Reconstitution Reserve. Aircraft stored that are planned for return to operating forces in the event of mobilization, replacement, or reconstitution. (AMCPAM 21-102, Atch 1)	None
Recur Rate. A recurring discrepancy on an aircraft occurs on the second through the fourth sortie or attempted sortie after corrective action has been taken and the system or subsystem is used and indicates the same malfunction.	Number of recurs / Number of pilot reported discrepancies * 100
Repair Cycle Processing Time. The average time in days for an unserviceable asset to be repaired on base or sent as NRTS to another repair agency. It starts when the replacement part is issued by Supply and ends when the asset is returned serviceable to Base Supply or is sent as NRTS to another repair agency.	None
Repeat Rate. A write-up, which occurs on the next sortie or attempted sortie after corrective action has been taken and the system or subsystem is used and indicates the same malfunction.	Total Number of repeats / Number of pilot reported discrepancies * 100
Scheduled Sortie. An aircraft scheduled for flight by tail number on the weekly flying schedule and confirmed on the daily flying schedule. Functional Check Flights (FCF) and Operational Check Flights (OCF) are excluded.	None
Sortie. The takeoff and subsequent full stop landing of a single aircraft as pre-briefed.	None
Spare Engine Rate. The average number of serviceable spare engines by TMSM for the unit. This data is the average of at least 4 weekly snapshots provided to HHQ by the SRAN Engine Managers. This rate is computed against the fleet WRE for each TMSM.	None
Sympathy. When multiple aircraft under the command of a flight leader/instructor pilot is canceled or is late in taking off due to the cancellation or delay of one or more of the aircraft in flight. Only the CAUSE aircraft will be counted as chargeable, with the remainder of the flight being recorded as SYMPATHY (Non-chargeable). Record these non-chargeable deviations as OTHER.	None
System Capability Rate. Measures a system's capability to perform. Computes the percent of time a system is fully operable. NOTE: Applies to CAMS units only.	Sorties flown – system not used – System (codes ¾ discrepancies) / Sorties flown *100

System Reliability Rate. Measures a system's reliability to perform. Compares the percent of time a system is fully operable & partially operable. NOTE: Applies to CAMS units only.	Sorties flown – systems not used – system (codes 2/3/4 discrepancies) / Sorties flown *100
Time Distribution Number (next Inspection) (TDI). A display of aircraft inspections by tail number showing the amount of time remaining to next inspection. Request for information is via CAMS screen 400.	None
Time Percent of Assigned Aircraft Within 30 percent of No Remaining Time To Inspection. Provide the percent of assigned aircraft within 30% of running out of flying time. For example: A-10 Minor/Major Phase cycle is 400 Hours. 30% of 400 hours is 120 hours. Therefore, it is expected that 30% of assigned aircraft will fall within 120 hours of total phase time.	None
Total Active Inventory (TAI). Aircraft assigned to operating forces for mission, training, test, or maintenance functions (includes primary aircraft inventory, backup aircraft inventory, attrition, & reconstitution reserve).	PAI + BAI
Total Not Mission Capable Maintenance (TNMCM). All categories of NMCM & NMCB for a unit over a specified period (metric used in LG summaries and briefings).	All NMCM categories + NMCB categories / Total possessed hours * 100
Total Not Mission Capable Maintenance (TNMCM) Rate. The percent of time that an aircraft is not mission capable due to maintenance (NMCM), plus not mission capable for both maint. and supply (NMCB).	NMCBS hours + NMCBU hours + NMCMS hours + NMCMU hours / Total possessed aircraft hours * 100
Total Not Mission Capable Supply (TNMCS). Percent of aircraft possessed hours that were NMCS & NMCB for a unit over a specified period (method used in LG summaries and briefings).	NMCS categories + NMCB categories / Total possessed hours * 100
Total Not Mission Capable Supply (TNMCS) Rate. All categories of not mission capable due to supply (NMCS), plus all categories of not mission capable for both maintenance and supply (NMCB).	NMCBS hours + NMCBU hours + NMCS hours / Total possessed aircraft hours * 100
Total Overall Aircraft Inventory (TOAI). The sum of the total active inventory & the total inactive inventory.	TAI + TII
Total Partial Mission Capable Maintenance Rate (TPMCM). Percent of aircraft that were PMCM & PMCB over a specified period (method used in LG summary and briefings).	PMCM + PMCB hours / Total possessed hours * 100
Total Partial Mission Capable Supply Rate (TPMCS). Percent of aircraft that were PMCS & PMCB over a specified period (method used in LG summary and briefings).	PMCS + PMCB hours / Total possessed hours * 100
Type, Model, Series, and Modification (TMSM). The std. nomenclature for engines according to MIL-STD-879.	None

Utilization (UTE). The UTE is the average sorties or hours flown calculated against primary aircraft inventory (PAI). Its purpose is to establish the primary performance goal that measures a unit's ability to meet its flying objective as well as the prime mechanism in resource allocation.	Monthly sorties or hours / PAI aircraft
Utilization (Hourly UTE). The average hours flown per PAI aircraft per month.	Total hours flown / PAI
Utilization (Sortie UTE). The avg. number of sorties flown per PAI aircraft per month.	Total sorties or departures flown / PAI
War Reserve/Readiness Engines (WRE). The quantify of serviceable engines required to support an operational unit's increased activity and/or problems caused by delay in maintenance deployment, extensions of transportation pipelines, or operational peculiarities during war.	None
Weather Deviations. Launches that are Early/Late or Canceled/added due to weather conditions at home station or destination.	None
Weekly Flying and Maintenance Schedule. The schedule, agreed to by operations and maintenance, and signed by the wing commander, to support the unit's weekly flying and maintenance requirements.	None
Workcenter Productivity. Percent of total labor hours available vs. consumed by direct productive labor hours.	Total direct labor hours documented / Total labor hours assigned + overtime documented * 100

Attachment 8

Helpful Hints for Data Investigation

Building Narratives for Out of Standard Indicators:

Monthly Report: As a starting point.

What are the major contributing systems for downtime?

What are the major contributing systems for man-hour consumption?

What are the common write-ups within the major contributing systems?

Are there aircraft with multiple write-ups in the major contributing systems or different systems?

Do PRDs indicate a recent trend in system write-ups for major contributors?

Do PRDs indicate a recent trend in write-ups for a particular tail number within major contributing systems?

What type of corrective actions were taken?

Do similar discrepancies still reappear?

Could cannibalizations have been a factor?

Did the aircraft/system cause problems with other maintenance indicators?

Is MICAP information available on aircraft with high supply down times?

How has the aircraft/system performed since the last incident? (PRD listing/CAMS Screen 174)

Are there any previously stated historical facts that apply that should be mentioned? (previous weeklies, studies, etc.)

Check repeat/recurs in an effort to identify actual component failures versus maintenance procedural, training, or skill level problems. This will involve contacting the shop responsible for the repair.

Are there any systems trends?

Are there technical data limitations?

Is there a lack of proper tools problem?

Add any other information you believe is pertinent to answer the particular maintenance indicator that you're writing about. Answer the questions, what is the problem, what is the unit doing to resolve the problem or what does the headquarters staff need to know to resolve of the problem.

Investigative Hints: Breaks, aborts, break rates, AWM, AWP, Phase/ISO Flows, Fleet Time, and Canns are only a few examples.

Technical Information: Always check with Deficiency Analysis if you have technical questions. It's a good idea to review their summaries also. Sometimes they've already gathered historical/current information on the same aircraft/systems you're looking at. You should also make it a point to talk to shops concerning problem aircraft and components.

Fix rates, write-ups exceeding the 4/8/12 hour requirement: You may be able to get the average time it takes to troubleshoot and repair some items from Deficiency Analysts or the shop responsible for repair.

Supply: The MICAP section of Supply should have information on aircraft and components with high supply times.

Trends: There are various types of trends you should investigate. Detailed analysis will depend on how much time is available to you and the type of data you're researching.

Are other units with like aircraft having similar problems?

Ask yourself; are the failures seasonal (more failures in hot/cold temperatures)?

Are the components failing environmentally sensitive (i.e., when the component goes from one temperature extreme to another, corroding, etc.)?

Could the failures be operating time related?

Do corrective actions point toward lack of training; or possibly the performing of workarounds due to lack of parts or tech data?

After reports and spreadsheets are updated is a good time to start looking at historical data for possible trends in current data.

Break Rates:

Verify documentation of Code 3 aircraft.

Was debriefing done correctly?

Are landing times correct?

Are the proper break systems used?

Verify accuracy of aircraft status.

Are the start and stop times of NMC condition correct?

Does the work unit code match the Code 3 system on the debrief form?

Isolate the problem system.

If the verification of the documentation of Code 3 Aircraft and verification of aircraft status is done, what systems stand out?

How do these systems compare with past history?

Identify components within suspect systems.

Does the CAMS documentation seem reasonable?

* Do the start and stop times for maintenance actions agree with the aircraft status times?

Follow the maintenance trail for problem items through the back shop.

Can you confirm the failure?

Can you identify common repair actions in the shop?

Check for Repeat/Recur/CND actions.

Were they good fixes?

Is there a chance that some Code 3 actions are self-inflicted?

Abort Rates:

Verify documentation of aborting aircraft.

Was debriefing done correctly?

Does the data correlate with the daily flying schedule?

Were the proper systems entered?

* Are the proper "When Discovered" codes used?

* Are the proper abort cause codes used?

Isolate the problem.

What systems stand out?

How do these systems compare with past history?

Identify components within suspect systems.

Does the CAMS documentation seem reasonable?

Do the start and stop times for maintenance actions agree with the aircraft status times?

* Follow the maintenance trail for problem items through the back shop.

Can you confirm the failure?

Can you identify common repair actions in the shop?

Check for Repeat/Recur/CND actions.

Were they good fixes?

CANN Rates:

If Cannibalization logs are maintained, do they match what is documented in CAMS?

Are there any obvious gaps in the cannibalization log (missing or incomplete data)?

Are there notes of cannibalization actions initiated but canceled?

Does it appear parts have been sitting around?

What's the average amount of time between a cannibalization action and when the part was received?

Isolate the problem.

What systems stand out?

How do these systems compare with past history?

Identify components within the suspect system.

* Does the CAMS documentation seem reasonable or is everything coded to the next higher assembly or subsystem level?

Try to associate the cannibalization action to a previous event or failure.

Can you confirm the failure?

Can you identify common repair actions in the shop?

Was the cannibalization action faster than removing/repairing/replacing the item?

Check for Repeat/Recur/CND actions.

Was the cannibalization action a good fix?

Did the cannibalization action only provide a partial fix?

Take your list of problem or suspect subsystems and components to Quality Assurance and the Technical Representatives.

Have the problems been previously identified?

Have there been MDRs, SRs, etc. submitted?

Are there pending MOD programs?

Identify Problem Aircraft.

Correlate your findings with other areas.

Is there a common thread with:

Causes for NMC/PMC conditions.

Overall system/component failures on your fleet.

Problem items in Base Self Sufficiency Program.

Overall Pilot Reported Discrepancies.

Air and Ground Abort causes.

Overall Repeat/Recur/CND problems/rates.

Are you tracking sufficient samples to get an accurate picture?

If updates to CAMS are backlogged or if CAMS has been down, did you give plenty of time for data to be updated before taking your sample(s)?

Did you compare your sample or monthly average with past history?

Is there a large change in overall rates?

Is there a large change in overall rates from one month to another or from one sample to another?

Can problem aircraft be identified as a "CANN Bird" or in an inspection or MOD?

Could the problem be tied to non-availability of CAMS?

* Could the problem be tied to a documentation problem?

If possible compare your data with other units with like aircraft and like missions.

Are your numbers comparable?

Are there similar trends?

Are there common system/component problems?

Document your findings and report them appropriately.

Key or important minimal items

Attachment 9

AFCAT 36-2223, 1 April 1995, USAF Formal Schools Extract:
Maintenance Data Systems Analysis Courses

J3ABR2R031 004 Maintenance Data Systems Analysis Apprentice
PDS Code XM4 DOD 558 Sheppard AFB TX/11 wk 1 day/ AFSC2R031/MASL D141012 Apr 95

Consists of training in statistical methods of data analysis, microcomputer applications, data retrieval techniques, and the operation and maintenance of management information systems. Training will include the use of computer remote terminals, microcomputers, and printers, the procedures for maintaining and correcting data systems, the interpretation and use of reports from management information systems, and the presentation of maintenance data.

Prerequisites: Computer literacy and completion of high school with courses in algebra, English composition, effective writing and typing are desirable. ECL 70 SA

J3AZR2R051 003 Maintenance Data Systems Analysis Journeyman
PDS Code XM5 DOD 558 Sheppard AFB TX/6wks/MASL D148162 Apr 95

Provides training for Air Force personnel in AFSC 2R0X1 in the knowledge and skills needed to perform the duties of a maintenance data systems analyst. The scope of data base management training includes use of a microcomputer system to interface with the standard base level computer (SBLC), retrieve data, and troubleshoot a Core Automated Maintenance System (CAMS) data base. Training also includes development and interpretation of statistical control charts, performance of statistical tests, and use of the analysis process.

Prerequisites: Civilians: Currently in or projected for a positions as a maintenance data systems analyst. Completion of algebra or equivalent mathematics mandatory. Requires working knowledge of microcomputers. **Military:** Possess 5-skill level, CDCs, with 6 months of data base management/analyst experience desirable. Completion of the interactive processing facility (IPF) tutorial, and have a working knowledge of microcomputers, peripherals, and the SBLC system. ECL 70 SA.

J3AAR2R071 005 Maintenance Data Systems Analysis Craftsman
PDS Code XM6 DOD 558 Sheppard AFB TX/4wks/MASL D141132 Jan 96

Consists of advanced data base maintenance training on Sperry/UNISYS standard base level computer (SBLC) to include in-depth training on query language processing (QLP) and interactive query utility (IQU). Emphasis is given to microcomputer applications for trend analysis, statistical techniques for analysis studies, to include probability applications, and use of parametric and non-parametric statistical test in the analysis process and presentation of results using analysis studies.

Prerequisites: Civilians: GS-7 or higher currently assigned as a maintenance data systems analyst. Must have 2 years of experience as a data base manager (DBM) or previously attended course J3AZR2R051 003. Working knowledge of microcomputers is mandatory. Completion of the interactive processing facility (IPF) tutorial is mandatory. **Military:** Completion of 7-skill level career development courses (CDC), completion of the core task training, and 18 months of on-the-job training as SSgt.

J3ACR2R071 006 Maintenance Data Systems Analysis Craftsman
(ANG/RES) PDS Code XB3 Sheppard AFB TX/2wks AFSC 2R071 Oct 96

Provides advanced training for Air National Guard and Air Force Reserve personnel in AFSC 2ROX1 in the skills needed to perform the duties of a maintenance data systems analyst. The scope of data base management training includes the use of a microcomputer to perform query language processor report writer programming actions. Includes development and interpretation of statistical control charts, performance of statistical tests, and use of the analysis process.

Prerequisites: Working knowledge of microcomputers is mandatory. Completion of the interactive processing facility (IPF) tutorial is mandatory. Civilian: GS-07 or higher currently assigned as a maintenance data systems analyst. Must have 2 years of experience as a data base manager or previously attended course J3AZR2RO51 003. Military: Completion of 7-skill level career development courses, completion of core task training, and 18 months of on-the-job training as a SSgt.
Quota Control 2 AF/DOP.

Attachment 10

LOGISTICS ANALYSIS DATA REQUEST

Requester: _____ Base/Office Symbol: _____ Phone: _____

Date of Request: _____ Date Required: _____

Signature of Requester: _____

Time Frame & Reason For Request:

_____

Data Required:

MDS: _____ _____ _____ _____ _____

SYS/WUC _____ _____ _____ _____ _____

Circle required categories:

Sorties Flown Hours Flown

Hours:	Poss	MC	TNMCM	TNMCS	PMCM	PMCS	PMCB	
Rates:	Cann	Break	4 Hr Fix	8 Hr Fix	12 Hr Fix	Abort	FSE	UTE

Other: _____

Additional Comments:

_____

****
****

Analyst: _____ Date Completed: _____ Analyst Hours: _____

Provided To:

_____

Remarks:

_____